PROCESS COOLING SOLUTIONS

SEPR

PHOENIX G

ErP Tier 2 COMPLIANT

Air cooled water chillers
featuring semi-hermetic screw compressors with R513A.
Nominal cooling capacity 375 - 1908 kW

R513A

Cooling your industry,
optimising your process.

MTA®
Cooling, conditioning, purifying.


D
E
F
G
H
J
E
E

PHOENIX G

MTA participates in the E.C.C. programme for LCP-HP. Certified products are listed on: www.eurovent-certification.com

Eurovent Certification applied to the units:
- Air/Water with cooling capacity up to 600 kW
- Water/Water up to 1500 kW

TECHNICAL SPECIFICATIONS

1. General

PHOENIX G chillers are designed for outdoor installation (IP54 electrical board protection rating) and equipped with air-cooled with finned core condensers, axial fans, single pass shell & tube evaporator with one refrigerant circuit for each compressor and a single water circuit. Are configured with one or two semi-hermetic screw compressors with continuous capacity control (from 100% to 12.5%). This solution makes it possible to enhance energy efficiency at low loads, maximising the seasonal efficiency. The units are equipped with a microprocessor electronic controller that offers fully independent management of all the main functions, including adjustments, alarms and interface with the externally supervisor systems. The refrigerant fluid is R513A.
All the units are designed, built and checked in compliance with ISO 9001, using components sourced from premium manufacturers.

The standard product, delivered for EU and EFTA countries, is subject to the following directives:
- ErP 2009/125/EC Regulation
- Machinery Directive 2006/42/EC;
- Electromagnetic Compatibility Directive 2014/30/EU;
- Pressure Equipment Directive 2014/68/EU.

The electrical equipments are designed in compliance with EN 60204-1.
All data in this catalogue refers to standard units without accessories/options which require an electrical feeding source and in nominal working conditions. (unless otherwise specified).

2. Acoustic configurations

The PHOENIX G range is available with the following acoustic configurations:
"HE" – Base acoustic configuration: compressors directly accessible by the external.
"SHE" – Low Noise configuration: compressors housed in a soundproof metal compartment; condenser fans with reduced speed than the "HE" configuration.
"SSN" – Extra Low Noise acoustic configuration: compressors housed in a soundproof metal compartment; axial fans with EC brushless technology.

3. Nameplate

Every chiller can be identified by its nameplate:

PNG2 XXXY / ZZZ

- ZZZ: coustic configuration of the unit: "HE", "SHE" o "SSN";
- Y: Number of refrigerant circuits;
- XXX: Compressors nominal power HP x 2;
- PNG2: PHOENIX G

4. Testing

All chillers are tested in order to ensure that it operates correctly. Specifically, the performed tests are:
- check the correct installation of all components and refrigerant or hydraulic leaks;
- electrical safety tests performed as prescribed by EN60204-1;
- check operation of the microprocessor controller and the values of all operating parameters;
- check operation, positioning of the temperature probes and pressure transducers.

During the installation, the units only require electrical and water connections, thus maximizing reliability levels. Installation of a water filter on the unit inlet is mandatory (evaporator inlet).

5. Compressors

The units of PHOENIX G range are equipped with semi-hermetic screw compressors optimized for R513A refrigerant. In the double refrigerant circuit units, the compressors can deliver down to 12,5% of the nominal cooling capacity. The seasonal efficiency for the high temperature process chiller (SEPR HT) are reached by the compressor's efficiency and by the generous dimensioning of the heat exchanger surfaces. The "Smart Stepless" software algorithm developed by MTA determines with greater precision the real position of the compressor capacity slide and therefore its cooling capacity, compared to the traditional capacity logics; current and average partialization percentage are also available on the display. In addition, even in situations with high variability of thermal load, the electronic control independently adjusts the capacity speed according to the needs of the system in a manner that is transparent to the user, with consequent greater stability of the evaporator outlet water temperature. Lubrication of the mechanical parts is ensured by a high-efficiency separator that is built in the high-pressure side of the compressor.

Each compressor is equipped with oil level sensor: installed in the bottom side of the compressor, the sensor has the function of pre-alarm and is activated for necessary and relevant operational logics for a better return of the oil to the compressor, while the lower sensor has a function of alarm and shutdown the unit in the event of intervention. The electric motor with star-delta starting (soft-starter optional) is cooled by the suctioned gas. Each compressor is equipped with a crankcase heater, a check valve in delivery side in order to prevent liquid return and a discharge shut-off valve. In the HE acoustic configuration, the compressors are unimpeded and directly accessibility for maintenance and, if necessary, any replacement operations. In the SHE and SSN acoustic configurations, for maintenance operations will be necessary to remove the compressor canopy composed by soundproof panels. The unloading function allows starting of the system and the operation of the machine, even under conditions that are very different from the nominal ones.

Smart Stepless

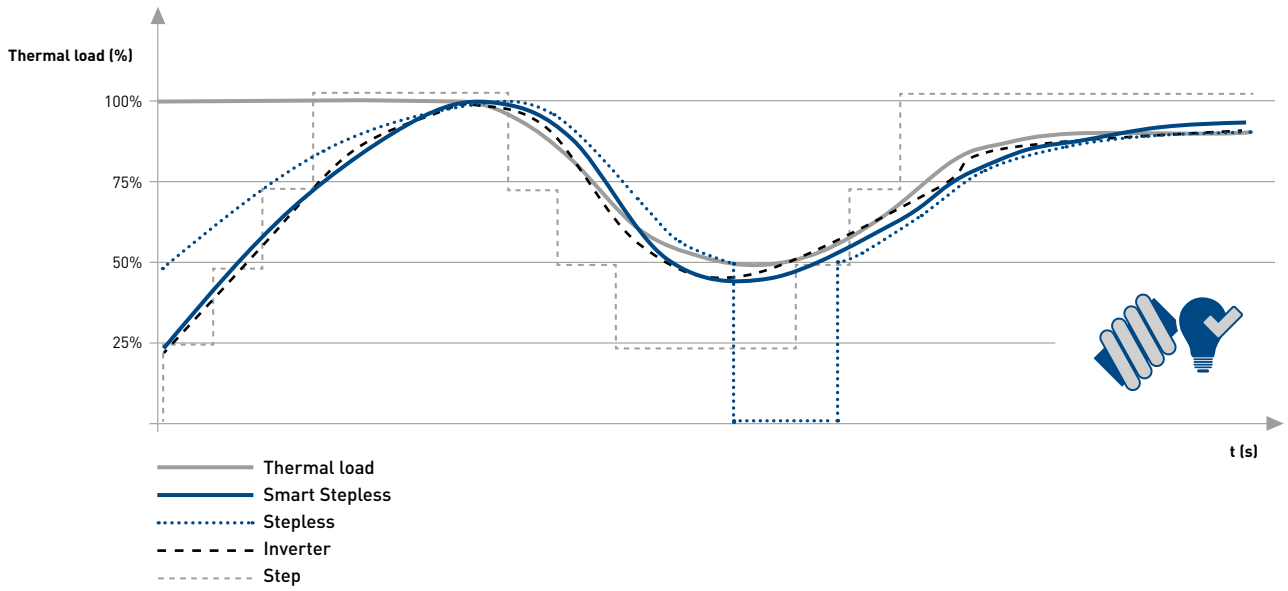

SEPR HT

The Seasonal Energy Performance Ratio High Temperature (SEPR HT), used in the European design context, expresses the ratio between the cooling demand and the total absorbed power of the unit during the entire year of operation, considering the maximum operating load point (Tw 12/7°C to 35 °C) and the three partial load point with lower ambient temperature projected on the average annual temperature in Strasbourg. The higher the SEPR HT value is, the more energy efficient of the unit will be, considering the annual process cooling context with outlet water temperature 7 °C.

6. Evaporator

The evaporator is the single pass shell & tube type with one or two independent refrigerant circuits and a single water circuit. The evaporators in the PHOENIX Plus 2 series are specifically designed for use with R513A and are composed of a bundle of copper tubes mechanically expanded at the ends into a tube plate and housed inside a carbon steel shell. The refrigerant flows inside the copper tubes, which are ribbed to increase the exchange efficiency, whilst the water, which is oriented by baffles, flows over the outside of the tubes. Each evaporator is externally protected with thermal insulation material and anti-condensation cladding with black embossed finish, and protected from the risk of freezing potentially caused by low evaporation temperatures by antifreeze function incorporated in the electronic controller, which monitors the water outlet temperature. The differential pressure switch protects the evaporator when the water flow is absent or insufficient. The water connections are easily accessible from the exterior of the unit and are "Victaulic" type, supplied with stub pipe. All the evaporators comply with the "EC" pressure vessels directive and can handle anti-freeze solutions and, in general, all other liquids that are compatible with the hydraulic circuit construction materials. During the installation is mandatory to fit a water filter in the machine evaporator inlet to avoid harmful deposits of dirt in the exchanger or in the storage tank (if included).

7. Condensing coils

The coils are of the finned core type with corrugated aluminium fins, manifolds and copper tubes on the gas side to maximise the exchange coefficient, galvanized sheet metal shoulders, modular transverse "V" formation, in order to maximise the ratio between the thermal exchange surface area and footprint. Each coil is composed of five rows. These exchangers are calculated using the latest technology and allowing the installation of reduced speed fans ensuring a further improvement of the sound levels of the unit. For both solutions, as option, the protective paint treatment is available. As option, the condensing coils are available in microchannel version, completely in painted aluminium. This solution allows, with the same heat exchanged, a reduction of the condensing coil surface with a corresponding decrease of the refrigerant charge required. Furthermore, through the reduced thickness of the coils, the microchannel solution ensures lower sound power than the version with finned pack. For both solutions, the protective paint treatment is available as an option. The surface is protected by an epoxy-acrylic resin based organic coating, then the entire condenser is coated with a reticulated polyester resin thermosetting powder coating.

8. Fans

The fans, complete with protective grids, are axial type and are made from sickled bladed with die-cast aluminium. The aerodynamics of the blades, developed on the basis of bionic principles, achieves high performances with reduced of sound levels. The electric motor forms a single unit with the fan wheel and integrates an overload protection device. The protection rating is IP54 with insulation class F in order to ensure outdoor operation in all ambient conditions. The condensing pressure control system is of the step type and is managed in such a way as to obtain progressive activation of steps in relation to the condensing pressure (for HE and SHE configurations). As option, are available the high efficiency axial fans with EC brushless technology (standard option for SSN configuration). The EC electronic switching technology, thanks to the continuous adjustment of fans speed and efficiently at partial loads, allows a high noise reduction in the most common operating conditions and a precise control of the condensing pressure, allowing to the units the functioning even at low ambient temperatures. The EC brushless fans are included as standard in the low ambient temperature option (down to -20 °C).

9. Refrigerant circuit

Each refrigerant circuit is completed as follows:

- Semi-hermetic screw compressor;
- High pressure switch for control of maximum condensing pressure;
- Compressor discharge shut-off valve;
- High pressure transducer;
- Safety valve in the high-pressure side (when required by EN378 standards);
- Safety valve in the low-pressure side (when required by EN378 standards);
- Condensing coils;
- Refrigerant shut-off valve on the liquid line;
- Refrigerant filter with removable cartridge;
- Liquid flow sight glass;
- Electronic expansion valve;
- Single pass shell & tube evaporator;
- Low pressure transducer;
- Non-freezing oil and refrigerant charge.

All brazing for connections of components is performed with silver alloy as the filler metal, while cold sections of the pipes are clad with insulating material to avoid the formation of condensation.

10. Integrated hydraulic module (optional)

PHOENIX G units can be equipped with a pumping (all models) and storage tank (mod. 2501÷6002) module composed by:

- Single or double pump (twin version with stand-by operation and automatic commutation) equipped with motors compliance with European Regulation N.640/2009, available with standard (2 bar) or increased pressure head (3 bar), installed down-line from the storage tank and equipped with shut off valves on the inlet;
- Storage tank, installed on the evaporator outlet line, made of carbon steel with external thermal insulation material and anti-condensation cladding + single or double pump (twin version with stand-by operation and automatic commutation) equipped with motors compliance with European Regulation N.640/2009, available with standard (2 bar) or increased pressure head (3 bar), installed down-line from the storage tank and equipped with shut off valves on the inlet (mod. 2501÷6002). This option includes, in the storage tank (if included): automatic air bleed valve, manual air bleed valve, expansion vessel, 3 barg pressure relief valve, water level sensor and drain valve;
- Water pressure gauge on the pump pressure line, to show the pressure in the system circuit (with chiller off) or pump delivery pressure (with chiller on).

11. Structure and casing

The base and outer panels are made of galvanized carbon steel sheet subjected to a phosphor degreasing treatment and painted with a polyester powder coating baked-on at 180 °C to provide a durable weatherproof finish, while the corner pillars are made of anodized aluminium profiles. The base is finished in orange-peel blue RAL 5013P, while the remaining parts of the frame and panels are finished in orange-peel light grey RAL 7035P. The unit frame is designed to ensure easy access to all components. The hydraulic connections are "Victaulic" type with stub pipe and coupling (Victaulic kit supplied as standard with each unit). The units are equipped with eyebolts for lifting and handling using belts.

12. Electrical panel

The unit and electrical panel are manufactured in conformity with EN 60204-1 (Safety of machinery – Electrical equipment of machines – Part 1: General rules), in particular, protection against the weather is ensured such as to allow outdoor installation of chillers (protection rating IP 54). The electrical panel, with forced ventilation, is equipped with a main circuit breaker with door-lock device and contains the automatic thermal-magnetic cut-outs to protect the compressors and pumps, and magnetic-only automatic cut-outs for fans (the thermal protection is integrated in the fan). The control section includes a transformer for the auxiliaries circuits and the microprocessor board. To ensure the protection against phase loss or wrong phase reversal is provided as standard the phase monitor device.

13. Control

Control and management of the unit are provided by a MTA's control system "xDRIVE" composed by microprocessor electronic controller IPC415D connected to the touch screen user terminal VTIPG; the latter has a 480x272 pixel screen. Thanks to the touch icons, with dynamic description and moving images, the display turns out to be easy to use, by both trained personnel and the system operator even if not specifically trained on the use of the controller. The terminal is located on the door of the electrical board and is protected by an openable polycarbonate cover.

Touch screen VTIPG terminal

The controller manages the following main functions independently:

- "Smart Stepless": Intelligent management of the speed of the compressor capacity control with self-adaptive logic depending on thermal load;
- stepless or step capacity control (4 steps for each compressor 25%÷50%÷75%÷100);
- control of the 25% partialization step depending on the oil level, on the compressor's operating range and on the compressor discharge temperature;
- temperature control of water at the evaporator outlet, with neutral zone logic;
- set-point management:
  - "fixed" (standard);
  - "compensated" positively or negatively in accordance with external air temperature;
  - "dual" set by a digital signal;
  - "variable in accordance with time bands" (4 time bands) programmable on the internal timer;
  - "variable by analogue signal 4÷20 mA;
- unloading function that allows system starting and unit operation also with parameters that differ significantly from nominal conditions (by deactivating one or more steps);
- display of the main working parameters of the electronic expansion valves;
- automatic rotation of compressors start sequence to minimise the working time of each compressor;
- on/off by daily and/or weekly time bands;
- management of fan activation steps in accordance with condensing pressure;
- EC fans speed regulation (if present) in relation to condensing pressure to reduce noise emissions in less demanding operating conditions and maintain condensing pressure within the limits required by the compressor;
- management of fans with "low-noise" function that makes it possible to reduce fan noise levels in accordance with programmable time band;
- antifreeze control in accordance with the water temperature at the evaporator outlet;
- count of operating hours of the unit and individual compressors with notification when the programmed operating hours before maintenance are exceeded;
- management of alarm messages, including:
  - low evaporating pressure;
  - high condensing pressure;
  - compressor thermal protection trip alarm;
  - fans thermal protections trip alarm;
  - pump failure alarm;
  - compressor oil level;
  - evaporator low flow rate alarm;
  - high and low temperature water inlet and outlet alarms;
  - antifreeze alarm;
  - phase sequence alarm.

In addition to alarms, the display can also present the following main information:

- compressors partialization values;
- current and average partialization values;
- condensing and evaporation pressure values of each circuit;
- inlet and outlet water temperature and external air;
- status of digital inputs and outputs of the electronic controller;
- alarms history;
- language selection (Italian, English, French, German, Spanish, Russian).
- the main operating parameters of the machine can be change through a password-protected menu.

The controller has a RS485 serial output with ModBus communication protocol for the connection to applications developed by third party System Integrators, for local and remote control and an Ethernet port for connecting to a LAN network through which you can access to the internal site controller to display/modify the operating parameters of the machine. Several units (up to 7) can be connected in parallel via Ethernet connection with its dedicated kit (one unit as a "master" and the other as "slave"). The user can manage the group of units by means of the master unit terminal or through the replicated remote terminal (optional).

14. Options and kits

Options (the options must be specified at the time of the order because they are installed in the factory):

Low ambient temperature

- Low ambient temperature option (down to -20 °C): this option includes a heating element controlled by a thermostat installed in the electrical board and axial EC brushless fans for a proper control of the condensing pressure. Is recommended to match this option with anti-freeze additives in appropriate concentration.

Hydraulic circuit

- Integrated hydraulic module: see chapter: "Integrated hydraulic module (optional)";
- Anti-freeze heater protection: adhesive heating elements installed in the evaporator, pump/s, storage tank and heat recovery exchangers (if included), controlled by the on-board electronic controller in accordance with ambient air temperature. This heater protects the evaporator when ambient temperature is below 0 °C and higher or equal to -10 °C. For ambient temperatures below -10 °C and above -20 °C you must provide an adequate quantity of anti-freeze solutions.

Refrigerant circuit

- Compressor housing (for HE acoustic configuration): with this option the unit will be configured with compressors housed in a soundproof metal compartment. This option is included, as standard, in the acoustic configurations SHE and SSN;
- Soft starter: installed to each compressor, these devices allow to preserve the compressors by mechanical stress, with a reduction of maintenance and downtime; soft starter option isn't suitable combined with capacitive elements and power factor correction systems must not be operated simultaneously with them;
- EC brushless fans: see chapter: "Fans";
- Shut-off valve on compressor suction line;
- Microchannel condensing coils: see chapter "Condensing coils";
- Protective paint treatment for condensing coils: see chapter "Condensing coils";
- Metal mesh protection filters for condensing coils;
- Total heat recovery: user can recover all the rejection energy of the system free of charge by diverting the hot gas flow from the main condenser to the recovery condenser (one condenser equipped with single or double refrigerant circuits and single water circuit) by means of a voltage-free contact in the electrical board. The recovery exchanger is externally insulated with closed cell elastomer foam and fitted with "Victaulic" hydraulic connections. For inlet water temperatures to the recovery condenser below than 20 °C it's mandatory to install the pressure control valves. This option is not available for model 3601 and from model 6402 to 12802.

Kits (the kits are supplied separately, generally at the same time of the unit, and installed by the user. They can be supplied later as spare parts, modification kits, completion kits, etc.):

- Metal mesh protection filters for condensing coils;
- Antivibration mounts;
- Victaulic hydraulic connections kit (supplied as standard with each units). For units configured with option "Total heat recovery", as standard, is provided also the Victaulic hydraulic connections kit for the heat recovery exchangers;
- Remote display: can be installed at a distance of up to 100 meters, it works as on-board display and it shows the same information. It is equipped with special support for external installation;
- Modularity kit: allows the connection of multiple units in parallel by means Ethernet connection to create a modular system (up to 7 units);

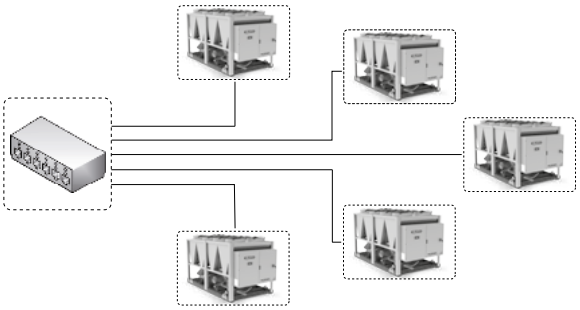

- Supervision system xWEB300D EVO: xWE300D EVO is a system to monitor, control and supervise up to 247 units equipped with IC208CX/IC121C/IC121CX/IC281L controllers (with the RS485 kit installed on the unit) or xDRIVE.

Kit composition:
- xWEB300D EVO;
- Quick connection guide;
- USB with manuals.

With the use of a web browser (Internet ExplorerR, Google ChromeR, SafariR or FirefoxR), it is possible to access to the xWEB300D EVO web page, to display all the device data, to manage the parameters and alarms and to view the operating graphics.

xWEB300D EVO features:
- Power supply 110÷230Vac ±10%, 50/60Hz;
- 1 LAN port (RJ45 connector) for local or remote interface with a PC;
- 1 RS485 serial port for devices connection (MODBUS - RTU);
- 1 USB port for stored data download;
- 4Gbit Flash memory and 64MB RAM for data storage;
- E-mail notification available for alarms.

Depending on the connection availability, xWEB300D EVO could send e-mail (in case of alarm) and connect to PDA or smartphone. Internet connection (via LAN or external GPRS modem) is required for remote access.

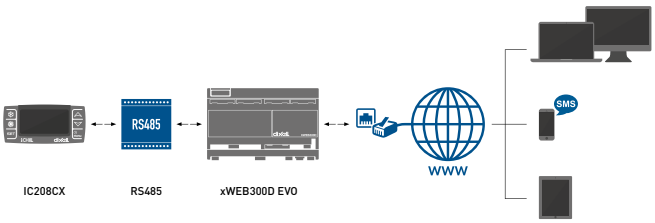

SELECTION GUIDE

For the selection of a machine use the following table and the data tables relative to each unit. For a correct chiller selection it is also necessary:

1) Observe the functioning limits as pointed out in the chart "Working limits";

2) To verify that the cool water flow is between minimum and maximum values of water flow which are described in the "General data" table; a very low flow can cause laminar flow and thus danger of ice formation and poor unit control; a veryhigh flow can cause great pressure drops and the possibility of tube failure inside the evaporator;

3) For working temperatures under 6 °C outlet water and 0 °C external air temperature it is necessary to add ethylene glycol or any other antifreeze liquids. Consult the chart "Solutions of water and glycol" to determine the necessary quantity of ethylene glycol, the reduction of cooling capacity, the increase of power absorbed by the compressors, the increase of evaporator pressure drop due to the presence of the ethylene glycol;

4) If the machine is to be installed at an altitude higher than 500 meters, you must calculate the cooling capacity reduction and the increase of power absorbed by the compressor through the coefficients pointed out in the chart "Condenser correction factors";

5) When the difference in temperature between water inlet and outlet is different from 5 °C, the cooling capacity and the absorbed power must be connected using the table "Correction factors $\Delta T \neq 5$ °C".

PERFORMANCE AND TECHNICAL DATA

GENERAL DATA

Version: **HE**

		2501	3201	3601	4302	5002	5602	6002
Nominal cooling capacity (1)	kW	375	505	620	671	792	873	873
Total absorbed power (1)	kW	91	123	135	172	181	213	213
EER (1)	-	4,14	4,10	4,57	3,89	4,37	4,11	4,11
SEPR HT (2)	-	5,45	5,41	5,70	5,73	5,75	5,91	5,91
Compressors								
Cooling circuits	n°	1	1	1	2	2	2	2
Compressors	n°	1	1	1	2	2	2	2
Capacity control	-	0 - 25 - 50 - 75 - 100			0 - 12,5 - 25 - 50 - 75 - 100			
Electrical power supply								
Power	V/Ph/Hz	400 ± 10% / 3 - PE / 50						
Auxiliary	V/Ph/Hz	24 - 230 ± 10% / 1 / 50						
Protection class	-	IP54						
Condenser coils								
Coils	n°	5	6	8	8	10	10	12
N° Rows C1	-	5	5	5	5	5	5	5
N° Rows C2	-	-	-	-	5	5	5	5
Total frontal surface	m²	10,3	12,4	16,5	16,5	20,6	20,6	24,8
Fans								
Fans	n°	5	6	8	8	10	10	12
Total airflow	m³/h	24,0	28,8	38,4	38,4	48,1	48,1	57,7
Power (each)	kW	1,65	1,65	1,65	1,65	1,65	1,65	1,65
Hydraulic circuit								
Min/max evaporator flow rate	m³/h	30/68	35/88	54/130	50/120	70/143	80/254	80/254
Evaporator water volume	l	131,8	125,4	157,9	122,7	172,0	240,3	278,4
Tank volume	l	530	530	800	800	800	800	800
Sound levels (3)								
Sound power	dB(A)	94,3	95,7	96,0	98,5	97,4	97,8	98,4
Sound pressure	dB(A)	66,3	67,7	68,0	70,5	69,4	69,8	70,4
Dimensions and installed weight (4)								
Width	mm	2190	2190	2190	2190	2190	2190	2190
Length	mm	3465	3465	4455	4455	5445	5445	6435
Height	mm	2425	2425	2425	2425	2425	2425	2425
Working weight	kg	2805	3280	3866	4263	4853	5054	5719

Data declared according to UNI EN 14511:2018. All data refers to standard units without accessories/options which require an electrical feeding source and in nominal working conditions.

(1) Data referred to nominal conditions, external ambient temperature 25 °C and evaporator water temperature IN/OUT 20/15 °C;

(2) Data declared in compliance with the European Regulation (EU) 2016/2281 with regard to ecodesign requirements for cooling products and high temperature process chillers;

(3) Sound power: determined on the basis of measurements taken in accordance with the standard ISO 3744. Sound pressure at 10 m: average value obtained in free field on a reflective surface at a distance of 10 m from the external side of the electrical panel of machine and at height of 1.6 m from the unit support base. Values with tollerance ± 2 dB. The sound levels refer to operation of the unit under full load in nominal conditions;

(4) The indicated weights are referred to the base configuration without accessories. According to the chosen configuration the weights could vary up to +20%.

		6402	7202	8402	9602	11202	12802
Nominal cooling capacity (1)	kW	1042	1194	1385	1573	1735	1908
Total absorbed power (1)	kW	246	278	321	363	405	441
EER (1)	-	4,24	4,30	4,31	4,34	4,28	4,33
SEPR HT (2)	-	5,65	5,80	5,87	5,89	6,11	5,75
Compressors							
Cooling circuits	n°	2	2	2	2	2	2
Compressors	n°	2	2	2	2	2	2
Capacity control	-	0 - 13 - 25 - 50 - 75 - 100					
Electrical power supply							
Power	V/Ph/Hz	400 ± 10% / 3 - PE / 50					
Auxiliary	V/Ph/Hz	24 - 230 ± 10% / 1 / 50					
Protection class	-	IP54					
Condenser coils							
Coils	n°	12	14	16	18	20	22
N° Rows C1	-	5	5	5	5	5	5
N° Rows C2	-	5	5	5	5	5	5
Total frontal surface	m²	24,8	28,9	33	37,1	41,3	45,4
Fans							
Fans	n°	12	14	16	18	20	22
Total airflow	m³/h	61	71,2	81,3	91,5	101,7	111,8
Power (each)	kW	1,65	1,65	1,65	1,65	1,65	1,65
Hydraulic circuit							
Min/max evaporator flow rate	m³/h	100 / 200	100 / 200	115 / 240	130 / 275	150 / 320	150 / 320
Evaporator water volume	l	272,4	258,6	346,5	462,9	618	601,5
Tank volume	l	-	-	-	-	-	-
Sound levels (3)							
Sound power	dB(A)	98,7	98,8	99,8	100,6	101,5	102
Sound pressure	dB(A)	70,7	70,8	71,8	72,6	73,5	74
Dimensions and installed weight (4)							
Width	mm	2190	2190	2190	2190	2190	2190
Length	mm	6435	7375	8365	9355	10345	11335
Height	mm	2425	2515	2515	2515	2515	2515
Working weight	kg	6289	7241	7260	7652	9116	9911

Data declared according to UNI EN 14511:2018. All data refers to standard units without accessories/options which require an electrical feeding source and in nominal working conditions.

(1) Data referred to nominal conditions, external ambient temperature 25 °C and evaporator water temperature IN/OUT 20/15 °C;

(2) Data declared in compliance with the European Regulation (EU) 2016/2281 with regard to ecodesign requirements for cooling products and high temperature process chillers;

(3) Sound power: determined on the basis of measurements taken in accordance with the standard ISO 3744. Sound pressure at 10 m: average value obtained in free field on a reflective surface at a distance of 10 m from the external side of the electrical panel of machine and at height of 1.6 m from the unit support base. Values with tollerance ± 2 dB. The sound levels refer to operation of the unit under full load in nominal conditions;

(4) The indicated weights are referred to the base configuration without accessories. According to the chosen configuration the weights could vary up to +20%.

GENERAL DATA
Version: **SHE**

		2501	3201	3601	4302	5002	5602	6002
Nominal cooling capacity (1)	kW	351	469	582	622	740	808	924
Total absorbed power (1)	kW	92	129	139	182	187	219	236
EER (1)	-	3,75	3,63	4,18	3,41	3,95	3,69	3,92
SEPR HT (2)	-	5,77	5,39	6,03	5,77	6,08	5,93	5,96
Compressors								
Cooling circuits	n°	1	1	1	2	2	2	2
Compressors	n°	1	1	1	2	2	2	2
Capacity control	-	0 - 25 - 50 - 75 - 100			0 - 12,5 - 25 - 50 - 75 - 100			
Electrical power supply								
Power	V/Ph/Hz	400 ± 10% / 3 - PE / 50						
Auxiliary	V/Ph/Hz	24 - 230 ± 10% / 1 / 50						
Protection class	-	IP54						
Condenser coils								
Coils	n°	5	6	8	8	10	10	12
N° Rows C1	-	5	5	5	5	5	5	5
N° Rows C2	-	-	-	-	5	5	5	5
Total frontal surface	m²	10,3	12,4	16,5	16,5	20,6	20,6	24,8
Fans								
Fans	n°	5	6	8	8	10	10	12
Total airflow	m³/h	15,7	18,9	25,2	25,2	31,5	31,5	37,8
Power (each)	kW	0,82	0,82	0,82	0,82	0,82	0,82	0,82
Hydraulic circuit								
Min/max evaporator flow rate	m³/h	30/68	35/88	54/130	50/120	70/143	80/254	80/254
Evaporator water volume	l	131,8	125,4	157,9	122,7	172,0	240,3	278,4
Tank volume	l	530	530	800	800	800	800	800
Sound levels (3)								
Sound power	dB(A)	89,6	88,5	88,7	91,1	90,0	90,4	90,9
Sound pressure	dB(A)	61,6	60,5	60,7	63,1	62,0	62,4	62,9
Dimensions and installed weight (4)								
Width	mm	2190	2190	2190	2190	2190	2190	2190
Length	mm	3465	3465	4455	4455	5445	5445	6435
Height	mm	2425	2425	2425	2425	2425	2425	2425
Working weight	kg	2875	3350	3936	4403	4993	5194	5859

Data declared according to UNI EN 14511:2018. All data refers to standard units without accessories/options which require an electrical feeding source and in nominal working conditions.

(1) Data referred to nominal conditions, external ambient temperature 25 °C and evaporator water temperature IN/OUT 20/15 °C;

(2) Data declared in compliance with the European Regulation (EU) 2016/2281 with regard to ecodesign requirements for cooling products and high temperature process chillers;

(3) Sound power: determined on the basis of measurements taken in accordance with the standard ISO 3744. Sound pressure at 10 m: average value obtained in free field on a reflective surface at a distance of 10 m from the external side of the electrical panel of machine and at height of 1.6 m from the unit support base. Values with tollerance ± 2 dB. The sound levels refer to operation of the unit under full load in nominal conditions;

(4) The indicated weights are referred to the base configuration without accessories. According to the chosen configuration the weights could vary up to +20%.

		6402	7202	8402	9602	11202	12802
Nominal cooling capacity (1)	kW	969	1114	1297	1473	1623	1778
Total absorbed power (1)	kW	259	289	338	382	424	457
EER (1)	-	3,75	3,85	3,84	3,85	3,83	3,89
SEPR HT (2)	-	5,63	5,80	5,90	5,92	6,05	6,12
Compressors							
Cooling circuits	n°	2	2	2	2	2	2
Compressors	n°	2	2	2	2	2	2
Capacity control	-	0 - 13 - 25 - 50 - 75 - 100					
Electrical power supply							
Power	V/Ph/Hz	400 ± 10% / 3 - PE / 50					
Auxiliary	V/Ph/Hz	24 - 230 ± 10% / 1 / 50					
Protection class	-	IP54					
Condenser coils							
Coils	n°	12	14	16	18	20	22
N° Rows C1	-	5	5	5	5	5	5
N° Rows C2	-	5	5	5	5	5	5
Total frontal surface	m²	24,8	28,9	33	37,1	41,3	45,4
Fans							
Fans	n°	12	14	16	18	20	22
Total airflow	m³/h	37,8	44,1	50,4	56,7	63	69,3
Power (each)	kW	0,82	0,82	0,82	0,82	0,82	0,82
Hydraulic circuit							
Min/max evaporator flow rate	m³/h	100 / 200	100 / 200	115 / 240	130 / 275	150 / 320	150 / 320
Evaporator water volume	l	272,4	258,6	346,5	462,9	618	601,5
Tank volume	l	-	-	-	-	-	-
Sound levels (3)							
Sound power	dB(A)	92,9	93,1	94,1	94,8	95,6	96,1
Sound pressure	dB(A)	64,9	65,1	66,1	66,8	67,6	68,1
Dimensions and installed weight (4)							
Width	mm	2190	2190	2190	2190	2190	2190
Length	mm	6435	7375	8365	9355	10345	11335
Height	mm	2425	2515	2515	2515	2515	2515
Working weight	kg	6269	7193	7185	7549	8985	9752

Data declared according to UNI EN 14511:2018. All data refers to standard units without accessories/options which require an electrical feeding source and in nominal working conditions.

(1) Data referred to nominal conditions, external ambient temperature 25 °C and evaporator water temperature IN/OUT 20/15 °C;

(2) Data declared in compliance with the European Regulation (EU) 2016/2281 with regard to ecodesign requirements for cooling products and high temperature process chillers;

(3) Sound power: determined on the basis of measurements taken in accordance with the standard ISO 3744. Sound pressure at 10 m: average value obtained in free field on a reflective surface at a distance of 10 m from the external side of the electrical panel of machine and at height of 1.6 m from the unit support base. Values with tollerance ± 2 dB. The sound levels refer to operation of the unit under full load in nominal conditions;

(4) The indicated weights are referred to the base configuration without accessories. According to the chosen configuration the weights could vary up to +20%.

GENERAL DATA
Version: **SSN**

		2501	3201	3601	4302	5002	5602	6002
Nominal cooling capacity (1)	kW	334	444	556	590	706	761	881
Total absorbed power (1)	kW	97	135	143	191	194	232	244
EER (1)	-	3,44	3,29	3,88	3,09	3,63	3,32	3,61
SEPR HT (2)	-	5,80	5,34	6,02	5,80	6,11	5,91	5,99
Compressors								
Cooling circuits	n°	1	1	1	2	2	2	2
Compressors	n°	1	1	1	2	2	2	2
Capacity control	-	0 - 25 - 50 - 75 - 100			0 - 12,5 - 25 - 50 - 75 - 100			
Electrical power supply								
Power	V/Ph/Hz	400 ± 10% / 3 - PE / 50						
Auxiliary	V/Ph/Hz	24 - 230 ± 10% / 1 / 50						
Protection class	-	IP54						
Condenser coils								
Coils	n°	5	6	8	8	10	10	12
N° Rows C1	-	5	5	5	5	5	5	5
N° Rows C2	-	-	-	-	5	5	5	5
Total frontal surface	m²	10,3	12,4	16,5	16,5	20,6	20,6	24,8
Fans								
Fans	n°	5	6	8	8	10	10	12
Total airflow	m³/h	12,6	15,1	20,1	20,1	25,1	25,1	30,1
Power (each)	kW	0,46	0,46	0,46	0,46	0,46	0,46	0,46
Hydraulic circuit								
Min/max evaporator flow rate	m³/h	30/68	35/88	54/130	50/120	70/143	80/254	80/254
Evaporator water volume	l	131,8	125,4	157,9	122,7	172,0	240,3	278,4
Tank volume	l	530	530	800	800	800	800	800
Sound levels (3)								
Sound power	dB(A)	86,9	86,6	86,8	89,2	88,0	88,5	89,0
Sound pressure	dB(A)	58,9	58,6	58,8	61,2	60,0	60,5	61,0
Dimensions and installed weight (4)								
Width	mm	2190	2190	2190	2190	2190	2190	2190
Length	mm	3465	3465	4455	4455	5445	5445	6435
Height	mm	2425	2425	2425	2425	2425	2425	2425
Working weight	kg	2875	3350	3936	4403	4993	5194	5859

Data declared according to UNI EN 14511:2018. All data refers to standard units without accessories/options which require an electrical feeding source and in nominal working conditions.

(1) Data referred to nominal conditions, external ambient temperature 25 °C and evaporator water temperature IN/OUT 20/15 °C;

(2) Data declared in compliance with the European Regulation (EU) 2016/2281 with regard to ecodesign requirements for cooling products and high temperature process chillers;

(3) Sound power: determined on the basis of measurements taken in accordance with the standard ISO 3744. Sound pressure at 10 m: average value obtained in free field on a reflective surface at a distance of 10 m from the external side of the electrical panel of machine and at height of 1.6 m from the unit support base. Values with tollerance ± 2 dB. The sound levels refer to operation of the unit under full load in nominal conditions;

(4) The indicated weights are referred to the base configuration without accessories. According to the chosen configuration the weights could vary up to +20%.

		6402	7202	8402	9602	11202	12802
Nominal cooling capacity (1)	kW	925	1059	1244	1412	1554	1689
Total absorbed power (1)	kW	269	300	352	398	438	472
EER (1)	-	3,44	3,53	3,54	3,55	3,55	3,58
SEPR HT (2)	-	5,58	5,80	5,86	5,89	5,98	6,03
Compressors							
Cooling circuits	n°	2	2	2	2	2	2
Compressors	n°	2	2	2	2	2	2
Capacity control	-	0 - 13 - 25 - 50 - 75 - 100					
Electrical power supply							
Power	V/Ph/Hz	400 ± 10% / 3 - PE / 50					
Auxiliary	V/Ph/Hz	24 - 230 ± 10% / 1 / 50					
Protection class	-	IP54					
Condenser coils							
Coils	n°	12	14	16	18	20	22
N° Rows C1	-	5	5	5	5	5	5
N° Rows C2	-	5	5	5	5	5	5
Total frontal surface	m²	24,8	28,9	33	37,1	41,3	45,4
Fans							
Fans	n°	12	14	16	18	20	22
Total airflow	m³/h	35,0	40,8	46,7	52,5	58,3	64,2
Power (each)	kW	0,42	0,42	0,42	0,42	0,42	0,42
Hydraulic circuit							
Min/max evaporator flow rate	m³/h	100 / 200	100 / 200	115 / 240	130 / 275	150 / 320	150 / 320
Evaporator water volume	l	272,4	258,6	346,5	462,9	618	601,5
Tank volume	l	-	-	-	-	-	-
Sound levels (3)							
Sound power	dB(A)	91,2	91,4	92,3	93	93,7	94,3
Sound pressure	dB(A)	63,2	63,4	64,3	65	65,7	66,3
Dimensions and installed weight (4)							
Width	mm	2190	2190	2190	2190	2190	2190
Length	mm	6435	7375	8365	9355	10345	11335
Height	mm	2425	2515	2515	2515	2515	2515
Working weight	kg	6269	7193	7185	7549	8985	9752

Data declared according to UNI EN 14511:2018. All data refers to standard units without accessories/options which require an electrical feeding source and in nominal working conditions.

(1) Data referred to nominal conditions, external ambient temperature 25 °C and evaporator water temperature IN/OUT 20/15 °C;

(2) Data declared in compliance with the European Regulation (EU) 2016/2281 with regard to ecodesign requirements for cooling products and high temperature process chillers;

(3) Sound power: determined on the basis of measurements taken in accordance with the standard ISO 3744. Sound pressure at 10 m: average value obtained in free field on a reflective surface at a distance of 10 m from the external side of the electrical panel of machine and at height of 1.6 m from the unit support base. Values with tollerance ± 2 dB. The sound levels refer to operation of the unit under full load in nominal conditions;

(4) The indicated weights are referred to the base configuration without accessories. According to the chosen configuration the weights could vary up to +20%.

ELECTRICAL DATA

Model	Version	Without pump				With single pump P2				With single pump 3			
		FLI [kW]	FLA [A]	ICF1 [A]	ICF2 [A]	FLI [kW]	FLA [A]	ICF1 [A]	ICF2 [A]	FLI [kW]	FLA [A]	ICF1 [A]	ICF2 [A]
2501	HE	122	204	314	472	128	215	325	482	132	222	331	489
	SHE	118	195	314	472	124	205	325	482	128	212	331	489
	SSN	117	192	314	472	123	203	325	482	127	209	331	489
3201	HE	160	263	436	682	168	278	450	696	170	281	453	699
	SHE	155	252	436	682	163	266	450	696	165	269	453	699
	SSN	153	249	436	682	162	263	450	696	164	266	453	699
3601	HE	181	295	465	721	189	309	479	735	193	315	485	741
	SHE	174	280	465	721	183	294	479	735	186	300	485	741
	SSN	172	276	465	721	180	290	479	735	192	296	485	741
4302	HE	227	376	469	603	235	390	483	617	239	396	489	623
	SHE	220	361	450	584	229	375	464	598	232	381	470	604
	SSN	218	356	445	579	226	370	459	593	230	376	465	599
5002	HE	244	409	533	690	256	429	553	710	260	435	559	717
	SHE	236	390	512	669	248	410	532	689	252	416	538	696
	SSN	233	384	506	664	245	404	526	684	249	411	533	690
5602	HE	275	457	584	754	287	477	604	774	291	484	610	781
	SHE	267	438	563	733	279	458	583	754	283	465	589	760
	SSN	264	433	557	726	276	453	577	747	280	459	584	753
6002	HE	299	496	690	936	311	516	710	956	315	522	716	962
	SHE	290	473	661	907	302	493	681	927	306	500	688	934
	SSN	286	466	654	900	298	487	674	920	302	493	680	926
6402	HE	320	527	699	569	336	553	726	595	340	560	732	601
	SHE	310	504	688	557	326	531	715	584	330	537	721	590
	SSN	307	497	685	552	323	524	711	579	327	530	717	585
7202	HE	357	583	756	617	374	609	783	643	377	615	789	650
	SHE	346	556	743	604	362	583	770	630	366	589	776	636
	SSN	342	548	739	600	359	575	766	626	362	581	772	632
8402	HE	415	686	929	753	435	719	962	786	439	729	971	796
	SHE	402	656	914	738	422	689	947	771	427	698	956	780
	SSN	397	647	910	734	417	680	942	767	422	689	952	776
9602	HE	468	774	1037	842	488	807	1070	875	493	816	1079	884
	SHE	454	740	1020	825	474	773	1053	858	479	782	1062	867
	SSN	449	730	1015	820	469	763	1048	853	474	772	1057	862
11202	HE	516	852	1231	990	536	885	1264	1022	541	894	1273	1032
	SHE	500	814	1212	971	520	847	1245	1003	525	856	1254	1013
	SSN	495	803	1207	965	515	836	1239	998	519	845	1249	1007
12802	HE	550	912	1373	1098	575	954	1415	1140	582	965	1426	1151
	SHE	532	870	1352	1077	557	912	1394	1119	564	924	1406	1130
	SSN	526	858	1346	1071	551	900	1388	1113	558	911	1399	1124

FLI = max power absorbed in the working limits condition;
FLA = max current absorbed in the working limits condition;
ICF1 = start-up current at the start of the last compressor in the working limits condition with fans with step regulation;
ICF2 = start-up current at the start of the last compressor in the working limits condition with soft starter.

SOUND LEVELS

Model	Version	Octave bands (Hz)								Power	Pressure
		63	125	250	500	1000	2000	4000	8000		
		Sound power level Lw dB (A)								dB (A)	dB (A)10m
2501	HE	54,1	68,8	76,4	86,8	91,8	88,1	73,8	65,7	94,3	66,3
	SHE	54,5	56,8	71,7	82,3	86,9	83,5	67,0	56,0	89,6	61,6
	SSN	46,8	56,5	70,2	79,7	84,2	80,9	64,5	53,2	86,9	58,9
3201	HE	55,4	73,0	84,6	87,9	93,6	86,1	80,7	68,7	95,7	67,7
	SHE	55,5	65,5	77,9	81,0	86,1	79,2	73,9	61,0	88,5	60,5
	SSN	48,3	64,3	76,5	79,1	84,1	77,3	72,2	59,3	86,6	58,6
3601	HE	56,3	72,5	86,7	89,2	93,1	87,2	78,9	69,0	96,0	68,0
	SHE	56,6	63,7	79,9	82,2	85,5	80,2	71,7	60,6	88,7	60,7
	SSN	49,1	62,7	78,3	80,3	83,6	78,2	69,9	58,7	86,8	58,8
4302	HE	56,1	70,7	80,7	94,6	95,4	88,1	77,3	68,1	98,5	70,5
	SHE	56,5	58,0	74,1	87,2	87,7	81,0	69,7	58,4	91,1	63,1
	SSN	48,8	58,0	73,1	85,3	85,8	79,1	67,7	56,1	89,2	61,2
5002	HE	57,1	71,8	79,4	89,9	94,9	91,1	76,8	68,7	97,4	69,4
	SHE	57,5	59,4	72,7	82,8	87,2	83,9	68,5	58,0	90,0	62,0
	SSN	49,7	59,3	72,0	80,9	85,2	82,0	66,2	55,3	88,0	60,0
5602	HE	57,9	72,1	79,2	92,1	95,0	90,4	77,6	69,1	97,8	69,8
	SHE	57,8	61,0	72,4	84,9	87,3	83,2	69,7	59,3	90,4	62,4
	SSN	51,0	60,5	71,8	83,0	85,4	81,3	67,6	57,0	88,5	60,5
6002	HE	58,4	74,7	85,3	91,6	95,9	89,9	81,7	70,8	98,4	70,4
	SHE	58,5	66,2	78,5	84,4	88,2	82,7	74,6	62,3	90,9	62,9
	SSN	51,4	65,2	77,1	82,5	86,2	80,8	72,8	60,4	89,0	61,0
6402	HE	60,3	76,6	87,9	90,9	96,4	89,2	84,0	72,5	98,7	70,7
	SHE	58,5	69,5	82,3	85,4	90,6	83,5	78,2	65,0	92,9	64,9
	SSN	55,4	68,8	80,8	83,7	88,8	81,7	76,7	63,8	91,2	63,2
7202	HE	60,8	76,0	89,9	92,2	95,8	90,2	82,2	72,6	98,8	70,8
	SHE	59,1	67,5	84,3	86,6	90,0	84,5	75,8	64,3	93,1	65,1
	SSN	55,9	67,3	82,7	84,9	88,2	82,7	74,5	63,2	91,4	63,4
8402	HE	61,4	76,0	93,4	94,0	94,9	92,0	79,5	71,9	99,8	71,8
	SHE	59,7	66,4	87,7	88,3	89,2	86,3	70,2	60,2	94,1	66,1
	SSN	56,5	66,7	85,9	86,6	87,5	84,4	69,8	59,5	92,3	64,3
9602	HE	61,8	76,6	92,0	93,1	97,8	92,0	83,0	73,4	100,6	72,6
	SHE	60,1	66,9	86,4	87,5	91,9	86,3	76,4	64,6	94,8	66,8
	SSN	56,9	67,3	84,7	85,8	90,1	84,4	75,1	63,5	93,0	65,0
11202	HE	62,9	76,8	91,1	92,7	99,7	91,0	82,8	73,9	101,5	73,5
	SHE	61,0	66,7	85,5	87,1	93,7	85,2	75,8	65,2	95,6	67,6
	SSN	58,0	67,3	83,8	85,4	91,8	83,3	74,7	64,1	93,7	65,7
12802	HE	63,1	76,6	88,9	96,0	99,5	92,9	84,9	74,0	102,0	74,0
	SHE	61,3	63,5	83,2	90,2	93,5	87,1	78,5	64,5	96,1	68,1
	SSN	58,2	65,8	81,8	88,4	91,6	85,3	77,2	63,5	94,3	66,3

Sound power: determined on the basis of measurements taken in accordance with the standard ISO 3744. Sound pressure at 10 m: average value obtained in free field on a reflective surface at a distance of 10 m from the external side of the electrical panel of machine and at height of 1.6 m from the unit support base. Values with tolerance +/- 2. The sound levels refer to operation of the unit under full load in nominal conditions.

Distance (1) L (m)	KdB
1	15
3	10
5	6
10	0

(1) To calculate a different distance of the sound pressure level, use the formula: dB(A)L=dB(A)10m+Kdb.

PERFORMANCE DATA

Version: **HE**

2501		External air temperature (°C)																		ta max
		25			32			35			38			40			43			
Glycol	tu (°C)	Pf (kW)	Pa (kW)	Fw (m³/h)	Pf (kW)	Pa (kW)	Fw (m³/h)	Pf (kW)	Pa (kW)	Fw (m³/h)	Pf (kW)	Pa (kW)	Fw (m³/h)	Pf (kW)	Pa (kW)	Fw (m³/h)	Pf (kW)	Pa (kW)	Fw (m³/h)	(°C)
20%	0	233,8	71,5	42,6	212,5	79,4	38,7	203,9	82,9	37,1	195,2	87,1	35,5	189,3	90,1	34,4	180,3	94,8	32,8	46
20%	3	258,1	74,7	47,0	234,9	82,7	42,7	225,5	86,2	41,0	215,9	90,5	39,3	209,5	93,6	38,1	199,7	98,4	36,3	46
20%	5	275,2	77,0	50,1	250,5	85,1	45,6	240,5	88,6	43,8	230,5	93,0	41,9	223,7	96,0	40,7	213,2	100,9	38,8	46
	7	298,2	80,0	51,1	271,4	88,1	46,6	260,7	91,6	44,7	249,9	96,0	42,9	242,5	99,1	41,6	231,1	104,1	39,6	46
	9	316,6	82,5	54,3	288,3	90,7	49,5	277,1	94,2	47,6	265,6	98,7	45,6	257,7	101,8	44,2	245,8	106,8	42,2	46
	11	335,6	85,1	57,6	305,8	93,3	52,5	294,1	96,9	50,5	281,9	101,4	48,4	273,6	104,6	47,0	261,0	109,6	44,8	46
	13	355,2	87,8	61,0	323,9	96,1	55,7	311,5	99,6	53,5	298,7	104,2	51,3	290,0	107,4	49,8	276,6	112,5	47,5	46
	15	375,3	90,6	64,5	342,4	99,0	58,9	329,5	102,5	56,7	316,1	107,1	54,3	306,9	110,4	52,8	293,0	115,5	50,4	45

3201		External air temperature (°C)																		ta max
		25			32			35			38			40			43			
Glycol	tu (°C)	Pf (kW)	Pa (kW)	Fw (m³/h)	Pf (kW)	Pa (kW)	Fw (m³/h)	Pf (kW)	Pa (kW)	Fw (m³/h)	Pf (kW)	Pa (kW)	Fw (m³/h)	Pf (kW)	Pa (kW)	Fw (m³/h)	Pf (kW)	Pa (kW)	Fw (m³/h)	(°C)
20%	0	316,2	97,7	57,5	288,6	108,4	52,5	277,3	112,9	50,5	265,9	118,3	48,4	258,1	122,0	47,0	246,3	127,8	44,8	46
20%	3	349,1	101,6	63,5	318,7	112,5	58,0	306,4	117,0	55,7	293,8	122,6	53,5	285,3	126,4	51,9	272,2	132,4	49,5	46
20%	5	371,9	104,4	67,7	339,7	115,4	61,8	326,6	120,0	59,4	313,2	125,7	57,0	304,2	129,6	55,3	290,4	135,7	52,8	46
	7	403,2	108,1	69,2	368,0	119,4	63,1	353,9	124,0	60,7	339,4	129,7	58,2	329,5	133,7	56,5	314,3	140,0	53,9	46
	9	427,8	111,4	73,4	390,4	122,8	67,0	375,6	127,4	64,5	360,2	133,3	61,8	349,7	137,3	60,0	333,7	143,7	57,3	46
	11	453,1	115,0	77,8	413,5	126,5	71,0	397,9	131,2	68,3	381,6	137,1	65,5	370,5	141,2	63,6	353,6	147,6	60,7	45
	13	478,8	118,9	82,3	437,2	130,5	75,1	420,8	135,2	72,3	403,6	141,2	69,3	392,0	145,4	67,3	374,0	151,9	64,3	44
	15	505,3	123,1	86,9	461,4	134,9	79,3	444,4	139,6	76,4	426,1	145,7	73,2	413,7	150,0	71,1	395,0	156,6	67,9	43

3601		External air temperature (°C)																		ta max
		25			32			35			38			40			43			
Glycol	tu (°C)	Pf (kW)	Pa (kW)	Fw (m³/h)	Pf (kW)	Pa (kW)	Fw (m³/h)	Pf (kW)	Pa (kW)	Fw (m³/h)	Pf (kW)	Pa (kW)	Fw (m³/h)	Pf (kW)	Pa (kW)	Fw (m³/h)	Pf (kW)	Pa (kW)	Fw (m³/h)	(°C)
20%	0	383,6	108,3	69,8	351,2	120,3	63,9	337,5	125,4	61,4	324,3	131,4	59,0	315,4	135,6	57,4	301,6	142,1	54,9	46
20%	3	424,1	112,4	77,1	388,5	124,4	70,7	373,7	129,5	68,0	359,0	135,6	65,3	349,1	139,8	63,5	333,9	146,4	60,7	46
20%	5	452,5	115,4	82,3	414,3	127,5	75,4	398,9	132,5	72,6	383,2	138,6	69,7	372,7	142,9	67,8	356,5	149,5	64,8	46
	7	491,4	119,4	84,3	449,8	131,6	77,1	433,0	136,6	74,3	416,0	142,8	71,3	404,4	147,0	69,4	386,7	153,6	66,3	46
	9	522,0	123,0	89,6	477,9	135,1	82,0	460,2	140,2	79,0	442,0	146,3	75,8	429,8	150,6	73,7	411,0	157,2	70,5	46
	11	553,6	126,8	95,0	506,9	139,0	87,0	488,2	144,0	83,8	469,0	150,2	80,5	455,9	154,5	78,3	436,2	161,1	74,9	46
	13	586,2	131,0	100,7	536,8	143,2	92,2	517,1	148,2	88,8	496,7	154,4	85,3	483,0	158,7	83,0	462,1	165,3	79,4	46
	15	619,6	135,5	106,5	567,5	147,8	97,5	546,8	152,7	94,0	525,5	158,9	90,3	510,9	163,2	87,8	488,8	169,8	84,0	46

Data declared according to UNI EN 14511:2018. All data refers to standard units without accessories/options which require an electrical feeding source and in nominal working conditions.
tu: outlet water temperature;
ta: external air temperature. When the external air temperature is higher than the "t max" the chiller doesn't stop but the "unloading" system capacity control is activated;
Pf: cooling capacity;
Pa: total absorbed power;
Fw: water flow rate with ΔT = 5 °C.
The performances have been calculated with 20% ethylene glycol in the water.
Interpolation is allowed. Extrapolation is not permitted. To calculate Pf, Pa and Fw for ΔT ≠ 5 °C to examine the table "Correction factors for ΔT ≠ 5 °C".

4302		External air temperature (°C)																		ta max
		25			32			35			38			40			43			
Glycol	tu	Pf	Pa	Fw	Pf	Pa	Fw	Pf	Pa	Fw	Pf	Pa	Fw	Pf	Pa	Fw	Pf	Pa	Fw	
	(°C)	(kW)	(kW)	(m³/h)	(kW)	(kW)	(m³/h)	(kW)	(kW)	(m³/h)	(kW)	(kW)	(m³/h)	(kW)	(kW)	(m³/h)	(kW)	(kW)	(m³/h)	(°C)
20%	0	428,5	133,2	78,0	387,3	149,0	70,5	370,4	155,6	67,4	353,2	163,3	64,3	341,8	168,6	62,2	323,9	176,8	58,9	46
20%	3	470,3	138,4	85,6	425,8	154,5	77,5	408,0	161,0	74,2	389,6	169,0	70,9	377,2	174,4	68,6	358,5	182,6	65,2	46
20%	5	499,5	142,4	90,9	452,8	158,6	82,4	434,3	165,2	79,0	415,1	173,3	75,5	402,1	178,7	73,2	382,7	187,1	69,6	46
	7	538,9	147,5	92,4	488,7	164,1	83,8	469,2	170,8	80,5	448,8	179,0	77,0	435,1	184,6	74,6	414,4	193,1	71,1	46
	9	570,3	152,7	97,9	518,1	169,5	88,9	497,7	176,2	85,4	476,5	184,5	81,8	462,2	190,2	79,3	440,6	198,9	75,6	46
	11	602,9	158,5	103,5	548,3	175,5	94,2	527,1	182,3	90,5	505,1	190,7	86,8	490,2	196,5	84,2	467,9	205,3	80,4	45
	13	636,6	165,0	109,4	579,6	182,3	99,6	557,8	189,1	95,9	534,7	197,7	91,9	519,3	203,6	89,2	495,9	212,5	85,2	44
	15	671,1	172,4	115,4	611,8	189,9	105,2	589,3	196,8	101,3	565,3	205,5	97,2	549,3	211,5	94,5	525,1	220,6	90,3	43

5002		External air temperature (°C)																		ta max
		25			32			35			38			40			43			
Glycol	tu	Pf	Pa	Fw	Pf	Pa	Fw	Pf	Pa	Fw	Pf	Pa	Fw	Pf	Pa	Fw	Pf	Pa	Fw	
	(°C)	(kW)	(kW)	(m³/h)	(kW)	(kW)	(m³/h)	(kW)	(kW)	(m³/h)	(kW)	(kW)	(m³/h)	(kW)	(kW)	(m³/h)	(kW)	(kW)	(m³/h)	(°C)
20%	0	494,2	143,0	89,9	449,8	158,7	81,8	431,5	165,7	78,5	413,2	174,2	75,2	400,8	180,2	72,9	381,8	189,8	69,4	46
20%	3	545,5	149,5	99,2	496,9	165,4	90,4	477,1	172,4	86,8	457,2	181,1	83,2	443,5	187,2	80,7	422,8	196,9	76,9	46
20%	5	581,2	154,1	105,7	529,7	170,1	96,4	509,0	177,2	92,6	487,8	185,9	88,7	473,5	192,0	86,1	451,4	201,8	82,1	46
	7	629,8	159,9	108,0	574,1	176,1	98,4	551,8	183,2	94,6	528,7	192,0	90,7	513,1	198,2	88,0	489,2	208,2	83,9	46
	9	668,5	165,0	114,7	609,6	181,2	104,6	586,2	188,3	100,6	562,0	197,2	96,4	545,4	203,5	93,6	520,1	213,6	89,2	46
	11	708,5	170,2	121,6	646,4	186,6	111,0	621,8	193,7	106,8	596,2	202,7	102,4	578,8	209,0	99,4	552,2	219,1	94,8	46
	13	749,6	175,8	128,8	684,4	192,2	117,6	658,7	199,3	113,2	631,6	208,4	108,5	613,4	214,8	105,4	585,3	224,9	100,5	46
	15	792,1	181,5	136,2	723,6	198,0	124,4	696,5	205,0	119,7	668,3	214,2	114,9	649,0	220,7	111,6	619,5	230,9	106,5	45

5602		External air temperature (°C)																		ta max
		25			32			35			38			40			43			
Glycol	tu	Pf	Pa	Fw	Pf	Pa	Fw	Pf	Pa	Fw	Pf	Pa	Fw	Pf	Pa	Fw	Pf	Pa	Fw	
	(°C)	(kW)	(kW)	(m³/h)	(kW)	(kW)	(m³/h)	(kW)	(kW)	(m³/h)	(kW)	(kW)	(m³/h)	(kW)	(kW)	(m³/h)	(kW)	(kW)	(m³/h)	(°C)
20%	0	553,6	165,8	100,7	502,9	184,3	91,5	482,1	192,4	87,7	461,0	202,4	83,9	446,7	209,5	81,2	424,6	220,9	77,2	46
20%	3	609,5	173,8	110,9	554,0	192,5	100,8	531,8	200,7	96,7	508,8	210,9	92,5	493,0	218,1	89,7	469,0	229,7	85,3	46
20%	5	648,5	179,4	117,9	589,8	198,3	107,3	566,2	206,5	103,0	541,8	216,9	98,5	525,3	224,2	95,5	499,9	235,9	90,9	46
	7	699,6	186,4	120,0	636,2	205,6	109,1	611,2	213,8	104,8	584,9	224,3	100,3	566,9	231,8	97,2	539,5	243,7	92,5	46
	9	741,3	192,6	127,2	674,4	212,0	115,7	648,1	220,2	111,2	620,4	230,8	106,4	601,4	238,4	103,2	572,7	250,4	98,2	46
	11	784,1	199,1	134,6	714,0	218,5	122,6	686,2	226,8	117,8	657,0	237,6	112,8	637,0	245,3	109,4	606,8	257,4	104,2	45
	13	828,0	205,8	142,2	754,1	225,4	129,5	725,7	233,7	124,7	694,9	244,6	119,4	673,9	252,3	115,8	641,8	264,6	110,2	44
	15	873,4	212,7	150,1	795,6	232,5	136,8	765,9	240,8	131,6	733,4	251,9	126,1	711,5	259,7	122,3				42

Data declared according to UNI EN 14511:2018. All data refers to standard units without accessories/options which require an electrical feeding source and in nominal working conditions.
tu: outlet water temperature;
ta: external air temperature. When the external air temperature is higher than the "t max" the chiller doesn't stop but the "unloading" system capacity control is activated;
Pf: cooling capacity;
Pa: total absorbed power;
Fw: water flow rate with ΔT = 5 °C.
The performances have been calculated with 20% ethylene glycol in the water.
Interpolation is allowed. Extrapolation is not permitted. To calculate Pf, Pa and Fw for ΔT ≠ 5 °C to examine the table "Correction factors for ΔT ≠ 5 °C".

6002		External air temperature (°C)																		ta max
		25			32			35			38			40			43			
Glycol	tu (°C)	Pf (kW)	Pa (kW)	Fw (m³/h)	Pf (kW)	Pa (kW)	Fw (m³/h)	Pf (kW)	Pa (kW)	Fw (m³/h)	Pf (kW)	Pa (kW)	Fw (m³/h)	Pf (kW)	Pa (kW)	Fw (m³/h)	Pf (kW)	Pa (kW)	Fw (m³/h)	(°C)
20%	0	620,6	179,5	112,9	566,2	199,1	103,0	543,6	207,5	98,9	521,1	217,7	94,8	505,7	224,9	92,0	482,3	236,1	87,7	46
20%	3	684,8	187,1	124,6	624,9	207,0	113,7	600,5	215,4	109,2	575,8	225,9	104,7	559,1	233,1	101,7	533,3	244,7	97,0	46
20%	5	729,5	192,6	132,7	666,0	212,6	121,1	640,3	221,1	116,5	614,2	231,7	111,7	596,3	239,1	108,4	568,9	250,7	103,5	46
	7	789,5	199,4	135,4	720,7	219,7	123,6	693,1	228,3	118,8	664,6	239,1	114,0	645,2	246,6	110,6	615,7	258,5	105,6	46
	9	837,7	205,6	143,7	764,9	226,1	131,2	735,8	234,7	126,2	705,7	245,6	121,1	685,3	253,2	117,6	654,0	265,3	112,2	46
	11	887,5	212,2	152,4	810,5	232,8	139,1	779,9	241,5	133,9	748,2	252,5	128,4	726,4	260,2	124,7	693,6	272,4	119,1	45
	13	938,4	219,2	161,2	857,4	240,0	147,3	825,4	248,7	141,8	791,9	259,8	136,0	769,1	267,6	132,1	734,2	280,0	126,1	44
	15	990,8	226,6	170,3	905,5	247,7	155,6	872,1	256,3	149,9	836,7	267,6	143,8	812,8	275,6	139,7	776,2	288,0	133,4	43

6402		External air temperature (°C)																		ta max
		25			32			35			38			40			43			
Glycol	tu (°C)	Pf (kW)	Pa (kW)	Fw (m³/h)	Pf (kW)	Pa (kW)	Fw (m³/h)	Pf (kW)	Pa (kW)	Fw (m³/h)	Pf (kW)	Pa (kW)	Fw (m³/h)	Pf (kW)	Pa (kW)	Fw (m³/h)	Pf (kW)	Pa (kW)	Fw (m³/h)	(°C)
20%	0	661,4	196,0	120,3	605,0	217,6	110,0	581,8	226,7	105,8	558,4	237,6	101,6	542,3	245,1	98,6	517,9	257,0	94,2	45
20%	3	728,0	203,8	132,4	666,3	225,8	121,2	641,1	234,9	116,6	615,4	246,1	111,9	597,9	253,8	108,7	570,9	266,0	103,8	45
20%	5	774,3	209,4	140,8	708,7	231,7	128,9	682,1	240,9	124,1	654,7	252,2	119,1	636,3	260,1	115,7	607,7	272,4	110,5	45
	7	836,8	216,5	143,5	765,5	239,2	131,3	737,0	248,5	126,4	707,3	260,2	121,3	687,0	268,3	117,8	656,2	280,8	112,5	45
	9	886,2	223,0	152,0	810,8	246,0	139,1	781,0	255,4	134,0	749,2	267,2	128,5	727,9	275,4	124,9	695,6	288,1	119,3	45
	11	936,8	230,0	160,8	857,5	253,3	147,2	826,1	262,8	141,8	792,8	274,7	136,1	770,3	283,0	132,2	736,1	296,0	126,4	45
	13	988,8	237,5	169,9	905,0	261,1	155,5	872,3	270,7	149,8	837,5	282,8	143,9	813,6	291,3	139,7	777,2	304,5	133,5	43
	15	1041,6	245,7	179,0	953,9	269,6	163,9	919,6	279,2	158,1	882,9	291,6	151,7	857,9	300,2	147,4				42

7202		External air temperature (°C)																		ta max
		25			32			35			38			40			43			
Glycol	tu (°C)	Pf (kW)	Pa (kW)	Fw (m³/h)	Pf (kW)	Pa (kW)	Fw (m³/h)	Pf (kW)	Pa (kW)	Fw (m³/h)	Pf (kW)	Pa (kW)	Fw (m³/h)	Pf (kW)	Pa (kW)	Fw (m³/h)	Pf (kW)	Pa (kW)	Fw (m³/h)	(°C)
20%	0	759,2	220,7	138,1	694,8	244,9	126,4	668,3	255,1	121,6	641,7	267,5	116,7	623,7	276,1	113,4	596,2	289,7	108,4	45
20%	3	835,3	229,6	151,9	764,9	253,9	139,1	736,1	264,1	133,9	707,0	276,5	128,6	687,3	285,2	125,0	657,1	298,7	119,5	45
20%	5	888,3	236,0	161,6	813,2	260,4	147,9	783,2	270,6	142,4	752,2	283,0	136,8	731,2	291,7	133,0	699,4	305,3	127,2	45
	7	959,0	244,2	164,5	878,2	268,7	150,6	845,7	278,8	145,0	812,1	291,4	139,2	789,4	300,2	135,4	754,7	313,7	129,4	45
	9	1016,1	251,6	174,3	930,2	276,3	159,6	895,9	286,3	153,7	860,4	298,9	147,6	836,3	307,7	143,5	799,7	321,3	137,2	45
	11	1074,1	259,7	184,4	983,7	284,4	168,9	947,7	294,4	162,7	910,2	307,0	156,3	884,6	315,8	151,9	846,0	329,5	145,2	45
	13	1133,6	268,3	194,7	1037,9	293,1	178,3	1000,7	303,1	171,9	961,4	315,7	165,1	934,3	324,5	160,5	893,6	338,1	153,5	45
	15	1194,0	277,6	205,2	1093,6	302,4	188,0	1054,9	312,3	181,3	1013,3	325,0	174,2	984,9	333,8	169,3	942,0	347,5	161,9	44

Data declared according to UNI EN 14511:2018. All data refers to standard units without accessories/options which require an electrical feeding source and in nominal working conditions.
tu: outlet water temperature;
ta: external air temperature. When the external air temperature is higher than the "t max" the chiller doesn't stop but the "unloading" system capacity control is activated;
Pf: cooling capacity;
Pa: total absorbed power;
Fw: water flow rate with ΔT = 5 °C.
The performances have been calculated with 20% ethylene glycol in the water.
Interpolation is allowed. Extrapolation is not permitted. To calculate Pf, Pa and Fw for ΔT ≠ 5 °C to examine the table "Correction factors for ΔT ≠ 5 °C".

8402		External air temperature (°C)																		ta max
		25			32			35			38			40			43			
Glycol	tu	Pf	Pa	Fw	Pf	Pa	Fw	Pf	Pa	Fw	Pf	Pa	Fw	Pf	Pa	Fw	Pf	Pa	Fw	
	(°C)	(kW)	(kW)	(m³/h)	(kW)	(kW)	(m³/h)	(kW)	(kW)	(m³/h)	(kW)	(kW)	(m³/h)	(kW)	(kW)	(m³/h)	(kW)	(kW)	(m³/h)	(°C)
20%	0	878,5	256,4	159,8	806,8	284,7	146,8	777,7	296,8	141,5	749,2	311,6	136,3	729,7	321,9	132,7	700,0	338,0	127,3	45
20%	3	966,1	267,0	175,7	888,4	296,1	161,6	856,8	308,4	155,8	825,6	323,5	150,2	804,5	334,0	146,3	772,2	350,4	140,4	45
20%	5	1027,6	274,7	186,9	944,8	304,2	171,8	912,2	316,6	165,9	879,1	331,8	159,9	857,0	342,5	155,9	822,7	359,1	149,6	45
	7	1109,3	284,0	190,2	1020,6	314,2	175,0	985,4	326,7	169,0	949,8	342,3	162,9	925,7	353,1	158,7	888,7	370,0	152,4	45
	9	1175,0	292,5	201,6	1081,8	323,2	185,6	1045,0	335,7	179,3	1007,4	351,5	172,8	982,2	362,5	168,5	943,3	379,6	161,8	45
	11	1243,2	301,4	213,4	1144,8	332,5	196,5	1106,7	345,2	190,0	1067,1	361,2	183,2	1040,4	372,3	178,6	999,5	389,5	171,6	45
	13	1313,2	310,9	225,6	1210,1	342,5	207,9	1170,0	355,1	201,0	1128,6	371,4	193,9	1100,3	382,5	189,0	1057,8	400,0	181,7	44
	15	1385,0	321,0	238,0	1277,0	352,9	219,5	1235,0	365,6	212,3	1191,6	382,0	204,8	1162,3	393,3	199,8	1117,6	410,9	192,1	43

9602		External air temperature (°C)																		ta max
		25			32			35			38			40			43			
Glycol	tu	Pf	Pa	Fw	Pf	Pa	Fw	Pf	Pa	Fw	Pf	Pa	Fw	Pf	Pa	Fw	Pf	Pa	Fw	
	(°C)	(kW)	(kW)	(m³/h)	(kW)	(kW)	(m³/h)	(kW)	(kW)	(m³/h)	(kW)	(kW)	(m³/h)	(kW)	(kW)	(m³/h)	(kW)	(kW)	(m³/h)	(°C)
20%	0	996,1	289,6	181,2	914,7	321,7	166,4	881,8	335,4	160,4	849,4	352,0	154,5	827,0	363,6	150,4	793,1	381,6	144,2	45
20%	3	1096,2	301,5	199,4	1007,9	334,6	183,3	972,2	348,5	176,8	936,7	365,6	170,4	912,5	377,4	166,0	875,2	395,9	159,2	45
20%	5	1165,7	310,0	212,0	1072,7	343,7	195,1	1035,2	357,7	188,3	997,6	375,1	181,4	971,8	387,1	176,7	932,9	405,9	169,7	45
	7	1259,3	320,4	215,9	1158,4	354,8	198,6	1118,5	369,1	191,8	1077,6	386,9	184,8	1050,0	399,2	180,0	1007,7	418,4	172,8	45
	9	1334,0	330,0	228,9	1228,1	364,9	210,7	1186,4	379,3	203,5	1143,5	397,3	196,2	1114,4	409,8	191,2	1069,8	429,3	183,5	45
	11	1411,4	340,2	242,3	1300,3	375,6	223,2	1256,5	390,0	215,7	1211,4	408,3	208,0	1180,7	421,0	202,7	1134,0	440,6	194,7	45
	13	1491,3	351,1	256,1	1374,2	386,9	236,0	1329,0	401,3	228,3	1281,4	419,9	220,1	1249,5	432,7	214,6	1199,9	452,7	206,1	44
	15	1573,3	362,6	270,4	1450,7	398,8	249,3	1403,7	413,3	241,2	1353,4	432,1	232,6	1319,8	445,1	226,8				42

11202		External air temperature (°C)																		ta max
		25			32			35			38			40			43			
Glycol	tu	Pf	Pa	Fw	Pf	Pa	Fw	Pf	Pa	Fw	Pf	Pa	Fw	Pf	Pa	Fw	Pf	Pa	Fw	
	(°C)	(kW)	(kW)	(m³/h)	(kW)	(kW)	(m³/h)	(kW)	(kW)	(m³/h)	(kW)	(kW)	(m³/h)	(kW)	(kW)	(m³/h)	(kW)	(kW)	(m³/h)	(°C)
20%	0	1091,5	321,3	198,5	1000,5	353,5	181,9	963,4	366,9	175,2	926,5	382,7	168,5	900,9	393,6	163,8	861,8	410,5	156,7	45
20%	3	1203,4	334,4	218,9	1104,1	367,6	200,8	1063,8	381,2	193,5	1023,5	397,4	186,1	995,6	408,5	181,1	953,0	425,8	173,3	45
20%	5	1281,3	344,0	233,0	1176,2	377,7	213,9	1133,7	391,4	206,2	1090,9	408,0	198,4	1061,5	419,3	193,0	1016,8	436,7	184,9	45
	7	1384,9	355,9	237,4	1271,3	390,6	218,0	1226,4	404,4	210,3	1180,1	421,4	202,3	1148,4	432,9	196,9	1099,9	450,7	188,6	45
	9	1468,6	367,0	252,0	1349,3	402,2	231,5	1302,1	416,2	223,4	1252,9	433,5	214,9	1219,9	445,2	209,3	1168,5	463,3	200,5	45
	11	1554,9	378,8	266,9	1429,5	414,6	245,4	1379,9	428,7	236,9	1328,7	446,2	228,1	1293,4	458,3	222,0	1239,8	476,6	212,8	45
	13	1644,0	391,4	282,4	1512,1	427,9	259,7	1460,5	442,0	250,9	1406,4	459,9	241,5	1369,2	472,1	235,2	1313,3	490,7	225,6	44
	15	1734,8	405,0	298,1	1597,0	442,0	274,4	1543,5	456,3	265,3	1486,5	474,6	255,4	1447,8	486,8	248,8	1388,8	505,7	238,7	43

12802		External air temperature (°C)																		ta max
		25			32			35			38			40			43			
Glycol	tu	Pf	Pa	Fw	Pf	Pa	Fw	Pf	Pa	Fw	Pf	Pa	Fw	Pf	Pa	Fw	Pf	Pa	Fw	
	(°C)	(kW)	(kW)	(m³/h)	(kW)	(kW)	(m³/h)	(kW)	(kW)	(m³/h)	(kW)	(kW)	(m³/h)	(kW)	(kW)	(m³/h)	(kW)	(kW)	(m³/h)	(°C)
20%	0	1211,8	354,0	220,4	1109,5	388,6	201,8	1067,1	402,7	194,1	1024,8	419,4	186,4	995,9	431,0	181,1	951,8	448,8	173,1	45
20%	3	1334,2	368,3	242,6	1221,6	403,3	222,2	1175,9	417,4	213,9	1129,2	434,4	205,4	1097,7	446,0	199,6	1049,5	463,9	190,9	45
20%	5	1419,1	378,5	258,1	1299,5	413,7	236,3	1251,5	427,8	227,6	1202,2	444,9	218,6	1168,5	456,5	212,5	1117,5	474,5	203,2	45
	7	1530,8	390,6	262,5	1401,6	426,4	240,3	1349,8	440,6	231,4	1296,4	457,8	222,3	1260,0	469,5	216,0	1205,1	487,5	206,6	45
	9	1621,1	402,2	278,1	1484,8	438,1	254,7	1430,3	452,2	245,4	1374,0	469,5	235,7	1335,4	481,2	229,1	1277,3	499,3	219,1	45
	11	1715,0	414,3	294,4	1570,1	450,4	269,5	1513,5	464,3	259,8	1453,9	481,8	249,6	1413,1	493,5	242,6	1352,1	511,6	232,1	45
	13	1809,8	427,2	310,8	1658,1	463,4	284,8	1599,0	477,3	274,6	1535,6	494,7	263,7	1492,9	506,5	256,4	1428,6	524,7	245,4	45
	15	1907,7	441,0	327,8	1748,1	477,1	300,4	1685,8	490,9	289,7	1619,5	508,4	278,3	1575,0	520,2	270,7	1507,2	538,3	259,0	43

Data declared according to UNI EN 14511:2018. All data refers to standard units without accessories/options which require an electrical feeding source and in nominal working conditions.

tu: outlet water temperature;

ta: external air temperature. When the external air temperature is higher than the "t max" the chiller doesn't stop but the "unloading" system capacity control is activated;

Pf: cooling capacity;

Pa: total absorbed power;

Fw: water flow rate with ΔT = 5 °C.

The performances have been calculated with 20% ethylene glycol in the water.

Interpolation is allowed. Extrapolation is not permitted. To calculate Pf, Pa and Fw for ΔT ≠ 5 °C to examine the table "Correction factors for ΔT ≠ 5 °C".

PERFORMANCE DATA

Version: **SHE**

2501		External air temperature (°C)																		ta max
		25			32			35			38			40			43			
Glycol	tu (°C)	Pf (kW)	Pa (kW)	Fw (m³/h)	Pf (kW)	Pa (kW)	Fw (m³/h)	Pf (kW)	Pa (kW)	Fw (m³/h)	Pf (kW)	Pa (kW)	Fw (m³/h)	Pf (kW)	Pa (kW)	Fw (m³/h)	Pf (kW)	Pa (kW)	Fw (m³/h)	(°C)
20%	0	223,6	71,6	40,7	202,5	79,9	36,8	193,9	83,5	35,3	185,2	88,0	33,7	179,2	91,2	32,6	170,1	96,3	31,0	46
20%	3	245,9	75,3	44,8	222,8	83,8	40,6	213,6	87,4	38,9	204,1	92,0	37,1	197,6	95,3	35,9	187,6	100,4	34,1	46
20%	5	261,5	78,0	47,6	237,0	86,5	43,1	227,3	90,2	41,4	217,2	94,8	39,5	210,3	98,1	38,3	199,7	103,3	36,3	46
	7	282,1	81,4	48,4	255,7	90,0	43,9	245,3	93,7	42,1	234,5	98,4	40,2	227,0	101,8	38,9	215,6	107,0	37,0	45
	9	298,7	84,3	51,3	270,8	93,0	46,5	260,0	96,7	44,6	248,4	101,5	42,6	240,5	104,9	41,3	228,6	110,2	39,2	44
	11	315,6	87,3	54,2	286,3	96,2	49,2	275,0	99,8	47,2	262,8	104,7	45,1	254,5	108,1	43,7	241,9	113,5	41,5	43
	13	333,0	90,4	57,2	302,3	99,4	51,9	290,4	103,1	49,9	277,5	108,0	47,7	268,8	111,4	46,2				42
	15	350,8	93,6	60,3	318,6	102,7	54,8	306,2	106,4	52,6	292,8	111,4	50,3	283,6	114,9	48,8				40

3201		External air temperature (°C)																		ta max
		25			32			35			38			40			43			
Glycol	tu (°C)	Pf (kW)	Pa (kW)	Fw (m³/h)	Pf (kW)	Pa (kW)	Fw (m³/h)	Pf (kW)	Pa (kW)	Fw (m³/h)	Pf (kW)	Pa (kW)	Fw (m³/h)	Pf (kW)	Pa (kW)	Fw (m³/h)	Pf (kW)	Pa (kW)	Fw (m³/h)	(°C)
20%	0	301,6	99,2	54,9	273,8	110,2	49,8	262,7	114,7	47,8	251,4	120,3	45,7	243,5	124,2	44,3	231,8	130,3	42,2	46
20%	3	331,5	103,9	60,3	301,1	115,1	54,8	289,1	119,7	52,6	276,4	125,5	50,3	267,8	129,4	48,7	254,9	135,7	46,4	45
20%	5	352,1	107,2	64,1	319,8	118,6	58,2	307,2	123,2	55,9	293,7	129,1	53,4	284,7	133,2	51,8	270,8	139,6	49,3	44
	7	379,9	111,8	65,2	344,9	123,3	59,2	331,4	127,9	56,8	316,7	133,9	54,3	306,8	138,1	52,6	291,8	144,6	50,1	43
	9	401,5	115,6	68,9	364,6	127,4	62,6	350,4	132,0	60,1	334,9	138,1	57,5	324,6	142,4	55,7				42
	11	423,7	119,9	72,8	384,8	131,7	66,1	369,9	136,4	63,5	353,5	142,6	60,7	342,5	146,9	58,8				40
	13	446,3	124,4	76,7	405,2	136,5	69,6	389,9	141,1	67,0	372,6	147,5	64,0							39
	15	469,2	129,4	80,7	426,1	141,6	73,3	410,0	146,3	70,5	391,9	152,6	67,4							38

3601		External air temperature (°C)																		ta max
		25			32			35			38			40			43			
Glycol	tu (°C)	Pf (kW)	Pa (kW)	Fw (m³/h)	Pf (kW)	Pa (kW)	Fw (m³/h)	Pf (kW)	Pa (kW)	Fw (m³/h)	Pf (kW)	Pa (kW)	Fw (m³/h)	Pf (kW)	Pa (kW)	Fw (m³/h)	Pf (kW)	Pa (kW)	Fw (m³/h)	(°C)
20%	0	368,7	108,0	67,1	336,0	120,2	61,1	322,8	125,3	58,7	309,5	131,6	56,3	300,4	136,0	54,7	286,7	142,9	52,1	46
20%	3	406,2	112,7	73,9	370,4	125,0	67,4	356,0	130,2	64,8	341,2	136,5	62,1	331,2	140,9	60,3	316,0	147,7	57,5	46
20%	5	432,3	116,2	78,6	394,1	128,5	71,7	378,9	133,6	68,9	363,2	140,0	66,1	352,6	144,4	64,1	336,4	151,3	61,2	46
	7	467,6	120,9	80,2	426,0	133,3	73,1	409,7	138,3	70,3	392,7	144,7	67,3	381,0	149,1	65,4	363,5	156,0	62,3	46
	9	495,1	124,9	85,0	451,4	137,3	77,4	434,2	142,3	74,5	416,1	148,7	71,4	403,9	153,1	69,3	385,1	160,1	66,1	45
	11	523,5	129,3	89,9	477,2	141,7	81,9	459,3	146,7	78,8	440,1	153,1	75,6	427,2	157,5	73,3	407,5	164,4	70,0	44
	13	552,3	134,0	94,9	503,6	146,5	86,5	484,9	151,4	83,3	464,7	157,7	79,8	451,1	162,2	77,5	430,4	169,1	73,9	43
	15	582,1	139,1	100,0	530,6	151,5	91,2	511,1	156,4	87,9	489,7	162,8	84,2	475,5	167,2	81,7				41

Data declared according to UNI EN 14511:2018. All data refers to standard units without accessories/options which require an electrical feeding source and in nominal working conditions.
tu: outlet water temperature;
ta: external air temperature. When the external air temperature is higher than the "t max" the chiller doesn't stop but the "unloading" system capacity control is activated;
Pf: cooling capacity;
Pa: total absorbed power;
Fw: water flow rate with ΔT = 5 °C.
The performances have been calculated with 20% ethylene glycol in the water.
Interpolation is allowed. Extrapolation is not permitted. To calculate Pf, Pa and Fw for ΔT ≠ 5 °C to examine the table "Correction factors for ΔT ≠ 5 °C".

4302		External air temperature (°C)																		ta max
		25			32			35			38			40			43			
Glycol	tu	Pf	Pa	Fw	Pf	Pa	Fw	Pf	Pa	Fw	Pf	Pa	Fw	Pf	Pa	Fw	Pf	Pa	Fw	
	(°C)	(kW)	(kW)	(m³/h)	(kW)	(kW)	(m³/h)	(kW)	(kW)	(m³/h)	(kW)	(kW)	(m³/h)	(kW)	(kW)	(m³/h)	(kW)	(kW)	(m³/h)	(°C)
20%	0	406,3	136,2	73,9	365,0	152,2	66,4	348,8	158,7	63,5	331,6	166,5	60,3	320,1	171,9	58,2	302,6	180,2	55,1	46
20%	3	444,1	142,5	80,8	400,1	158,7	72,8	382,9	165,1	69,7	364,8	173,2	66,4	352,4	178,6	64,1	333,9	187,0	60,8	46
20%	5	470,6	147,2	85,6	424,4	163,6	77,2	406,7	170,1	74,0	387,7	178,2	70,5	375,1	183,7	68,2	355,7	192,2	64,7	45
	7	505,5	153,5	86,7	456,6	170,2	78,3	438,0	176,7	75,1	418,0	185,0	71,7	404,4	190,6	69,4	384,1	199,2	65,9	43
	9	533,5	159,5	91,6	482,7	176,4	82,8	463,5	183,0	79,6	442,5	191,4	76,0	428,6	197,1	73,6				42
	11	562,4	166,3	96,6	509,6	183,4	87,5	489,8	190,0	84,1	468,1	198,5	80,4	453,6	204,3	77,9				41
	13	592,1	173,8	101,8	537,2	191,2	92,3	516,9	197,8	88,8	494,3	206,5	84,9							39
	15	622,3	182,4	107,0	565,4	199,9	97,2	544,4	206,6	93,6	521,3	215,4	89,6							38

5002		External air temperature (°C)																		ta max
		25			32			35			38			40			43			
Glycol	tu	Pf	Pa	Fw	Pf	Pa	Fw	Pf	Pa	Fw	Pf	Pa	Fw	Pf	Pa	Fw	Pf	Pa	Fw	
	(°C)	(kW)	(kW)	(m³/h)	(kW)	(kW)	(m³/h)	(kW)	(kW)	(m³/h)	(kW)	(kW)	(m³/h)	(kW)	(kW)	(m³/h)	(kW)	(kW)	(m³/h)	(°C)
20%	0	472,9	143,2	86,0	428,6	159,9	78,0	410,6	167,1	74,7	392,2	176,1	71,3	379,6	182,5	69,0	360,4	192,6	65,6	46
20%	3	519,8	150,6	94,5	471,5	167,6	85,8	452,3	174,8	82,3	432,1	184,1	78,6	418,4	190,6	76,1	397,4	200,9	72,3	46
20%	5	552,7	155,9	100,5	501,4	173,0	91,2	481,1	180,4	87,5	459,8	189,7	83,6	445,3	196,2	81,0	422,9	206,7	76,9	46
	7	596,2	162,6	102,2	541,0	180,0	92,8	519,4	187,3	89,1	496,1	196,8	85,1	480,5	203,5	82,4	456,4	214,1	78,3	45
	9	630,9	168,4	108,3	572,9	186,0	98,3	550,2	193,3	94,4	525,7	202,9	90,2	509,3	209,7	87,4	483,8	220,4	83,0	44
	11	666,8	174,5	114,5	605,6	192,2	104,0	581,8	199,5	99,9	556,2	209,2	95,5	538,8	216,1	92,5	512,0	226,9	87,9	43
	13	703,2	180,8	120,8	639,2	198,6	109,8	614,4	206,0	105,5	587,5	215,8	100,9	569,0	222,7	97,8				42
	15	740,6	187,4	127,3	673,5	205,3	115,8	647,8	212,7	111,4	619,2	222,6	106,4	600,1	229,6	103,1				40

5602		External air temperature (°C)																		ta max
		25			32			35			38			40			43			
Glycol	tu	Pf	Pa	Fw	Pf	Pa	Fw	Pf	Pa	Fw	Pf	Pa	Fw	Pf	Pa	Fw	Pf	Pa	Fw	
	(°C)	(kW)	(kW)	(m³/h)	(kW)	(kW)	(m³/h)	(kW)	(kW)	(m³/h)	(kW)	(kW)	(m³/h)	(kW)	(kW)	(m³/h)	(kW)	(kW)	(m³/h)	(°C)
20%	0	525,6	169,0	95,6	474,9	188,7	86,4	454,7	197,1	82,7	433,4	207,9	78,8	418,7	215,6	76,2	396,3	227,7	72,1	46
20%	3	576,0	178,2	104,8	520,9	198,3	94,7	499,3	206,8	90,8	475,9	217,9	86,6	460,0	225,8	83,7	435,6	238,2	79,2	45
20%	5	611,2	184,7	111,2	552,7	205,2	100,5	529,9	213,7	96,4	505,4	224,9	91,9	488,4	232,9	88,8	462,8	245,6	84,2	44
	7	656,1	193,0	112,5	593,5	213,8	101,8	569,4	222,4	97,6	542,9	233,8	93,1	524,9	241,9	90,0				42
	9	692,8	200,2	118,9	627,0	221,3	107,6	601,8	229,9	103,3	573,8	241,5	98,5	554,9	249,7	95,2				41
	11	730,5	207,8	125,4	661,2	229,0	113,5	635,2	237,6	109,0	605,7	249,5	104,0	585,6	257,8	100,5				40
	13	768,7	215,6	132,0	696,3	237,1	119,6	669,1	245,7	114,9	638,1	257,7	109,6							38
	15	807,6	223,7	138,8	731,8	245,5	125,8	703,8	254,1	121,0										37

Data declared according to UNI EN 14511:2018. All data refers to standard units without accessories/options which require an electrical feeding source and in nominal working conditions.
tu: outlet water temperature;
ta: external air temperature. When the external air temperature is higher than the "t max" the chiller doesn't stop but the "unloading" system capacity control is activated;
Pf: cooling capacity;
Pa: total absorbed power;
Fw: water flow rate with ΔT = 5 °C.
The performances have been calculated with 20% ethylene glycol in the water.
Interpolation is allowed. Extrapolation is not permitted. To calculate Pf, Pa and Fw for ΔT ≠ 5 °C to examine the table "Correction factors for ΔT ≠ 5 °C".

6002		External air temperature (°C)																		ta max
		25			32			35			38			40			43			
Glycol	tu (°C)	Pf (kW)	Pa (kW)	Fw (m³/h)	Pf (kW)	Pa (kW)	Fw (m³/h)	Pf (kW)	Pa (kW)	Fw (m³/h)	Pf (kW)	Pa (kW)	Fw (m³/h)	Pf (kW)	Pa (kW)	Fw (m³/h)	Pf (kW)	Pa (kW)	Fw (m³/h)	(°C)
20%	0	593,2	180,8	107,9	538,6	201,1	98,0	516,6	209,7	94,0	493,9	220,5	89,8	478,4	228,0	87,0	454,8	239,9	82,7	46
20%	3	651,8	189,7	118,5	592,1	210,4	107,7	568,3	219,0	103,4	543,4	230,0	98,8	526,6	237,7	95,8	500,7	250,0	91,1	45
20%	5	692,4	196,0	125,9	629,1	217,0	114,4	604,3	225,7	109,9	577,8	236,9	105,1	559,9	244,7	101,8	532,6	257,1	96,8	44
	7	746,1	204,1	127,9	677,8	225,4	116,2	651,2	234,2	111,7	622,5	245,6	106,7	603,2	253,6	103,4	573,6	266,2	98,4	43
	9	789,2	211,3	135,4	717,1	232,9	123,0	689,3	241,7	118,3	658,9	253,2	113,1	638,5	261,3	109,5				42
	11	833,2	218,9	143,0	757,5	240,7	130,0	728,2	249,6	125,0	696,3	261,3	119,5	674,7	269,5	115,8				40
	13	878,3	227,1	150,9	798,4	249,1	137,1	768,0	257,9	131,9	734,6	269,8	126,2							39
	15	924,1	235,7	158,8	840,4	258,0	144,4	808,9	266,8	139,0										37

6402		External air temperature (°C)																		ta max
		25			32			35			38			40			43			
Glycol	tu (°C)	Pf (kW)	Pa (kW)	Fw (m³/h)	Pf (kW)	Pa (kW)	Fw (m³/h)	Pf (kW)	Pa (kW)	Fw (m³/h)	Pf (kW)	Pa (kW)	Fw (m³/h)	Pf (kW)	Pa (kW)	Fw (m³/h)	Pf (kW)	Pa (kW)	Fw (m³/h)	(°C)
20%	0	631,3	199,4	114,8	574,4	221,5	104,5	551,5	230,6	100,3	527,8	242,0	96,0	511,7	250,0	93,1	487,4	262,4	88,6	45
20%	3	691,8	208,7	125,8	629,5	231,3	114,5	605,2	240,5	110,1	579,2	252,2	105,3	561,6	260,3	102,1	534,7	273,0	97,2	45
20%	5	733,7	215,3	133,4	667,9	238,3	121,5	642,1	247,5	116,8	614,5	259,4	111,8	595,9	267,7	108,4	567,4	280,6	103,2	44
	7	789,5	224,0	135,4	718,1	247,4	123,1	690,7	256,7	118,4	660,8	268,9	113,3	640,6	277,3	109,8				42
	9	833,4	231,7	143,0	758,2	255,5	130,1	729,3	264,9	125,1	697,6	277,2	119,7	676,3	285,8	116,0				41
	11	877,8	240,0	150,7	798,9	264,1	137,1	769,1	273,5	132,0	735,7	286,1	126,3							39
	13	923,5	248,9	158,6	840,4	273,4	144,4	809,2	282,8	139,0	774,1	295,6	133,0							38
	15	969,4	258,6	166,6	882,7	283,3	151,7	850,0	292,9	146,1										37

7202		External air temperature (°C)																		ta max
		25			32			35			38			40			43			
Glycol	tu (°C)	Pf (kW)	Pa (kW)	Fw (m³/h)	Pf (kW)	Pa (kW)	Fw (m³/h)	Pf (kW)	Pa (kW)	Fw (m³/h)	Pf (kW)	Pa (kW)	Fw (m³/h)	Pf (kW)	Pa (kW)	Fw (m³/h)	Pf (kW)	Pa (kW)	Fw (m³/h)	(°C)
20%	0	725,4	223,6	131,9	660,7	248,6	120,2	635,0	259,0	115,5	608,3	272,0	110,6	590,1	281,0	107,3	562,8	295,3	102,4	45
20%	3	795,0	233,9	144,6	724,3	259,0	131,7	696,4	269,3	126,7	667,2	282,4	121,4	647,4	291,5	117,8	617,3	305,8	112,3	45
20%	5	843,0	241,4	153,3	768,3	266,5	139,7	738,9	276,8	134,4	707,9	289,8	128,8	686,9	298,9	124,9	655,2	313,2	119,2	45
	7	906,6	250,9	155,5	825,7	276,2	141,6	794,6	286,3	136,2	760,9	299,5	130,5	738,2	308,6	126,6	703,6	322,9	120,6	43
	9	957,1	259,6	164,2	871,8	284,8	149,6	839,1	294,9	144,0	803,7	308,1	137,9	779,6	317,2	133,8				42
	11	1008,5	268,7	173,1	919,1	294,0	157,8	885,0	304,0	151,9	847,1	317,2	145,4	821,9	326,4	141,1				41
	13	1061,1	278,5	182,3	966,9	303,9	166,1	931,2	313,8	160,0	891,8	327,0	153,2	865,3	336,1	148,6				40
	15	1114,0	289,0	191,5	1015,0	314,4	174,5	978,2	324,2	168,1	936,8	337,4	161,0							38

Data declared according to UNI EN 14511:2018. All data refers to standard units without accessories/options which require an electrical feeding source and in nominal working conditions.
tu: outlet water temperature;
ta: external air temperature. When the external air temperature is higher than the "t max" the chiller doesn't stop but the "unloading" system capacity control is activated;
Pf: cooling capacity;
Pa: total absorbed power;
Fw: water flow rate with ΔT = 5 °C.
The performances have been calculated with 20% ethylene glycol in the water.
Interpolation is allowed. Extrapolation is not permitted. To calculate Pf, Pa and Fw for ΔT ≠ 5 °C to examine the table "Correction factors for ΔT ≠ 5 °C".

8402		External air temperature (°C)																		ta max
		25			32			35			38			40			43			
Glycol	tu (°C)	Pf (kW)	Pa (kW)	Fw (m³/h)	Pf (kW)	Pa (kW)	Fw (m³/h)	Pf (kW)	Pa (kW)	Fw (m³/h)	Pf (kW)	Pa (kW)	Fw (m³/h)	Pf (kW)	Pa (kW)	Fw (m³/h)	Pf (kW)	Pa (kW)	Fw (m³/h)	(°C)
20%	0	840,4	260,3	152,9	769,0	290,0	139,9	740,8	302,4	134,7	711,9	318,0	129,5	692,1	328,9	125,9	662,4	345,9	120,5	45
20%	3	921,1	273,2	167,5	843,6	303,5	153,4	813,5	316,1	148,0	781,9	332,0	142,2	760,6	343,1	138,3	727,8	360,4	132,4	45
20%	5	977,0	282,3	177,7	895,4	313,2	162,9	863,9	325,8	157,1	830,4	341,9	151,0	807,9	353,1	146,9	773,5	370,6	140,7	44
	7	1051,0	293,8	180,2	963,4	325,3	165,2	929,7	337,9	159,4	893,8	354,3	153,3	869,4	365,7	149,1				42
	9	1110,4	303,9	190,5	1018,6	335,9	174,8	983,2	348,6	168,7	945,4	365,1	162,2	920,1	376,7	157,9				41
	11	1171,2	314,8	201,1	1074,7	347,1	184,5	1038,4	359,7	178,3	998,4	376,5	171,4	971,9	388,1	166,8				40
	13	1233,8	326,1	211,9	1132,7	358,7	194,6	1095,0	371,4	188,1	1053,3	388,4	180,9							39
	15	1297,5	338,1	223,0	1192,0	371,1	204,9	1152,6	383,7	198,1										37

9602		External air temperature (°C)																		ta max
		25			32			35			38			40			43			
Glycol	tu (°C)	Pf (kW)	Pa (kW)	Fw (m³/h)	Pf (kW)	Pa (kW)	Fw (m³/h)	Pf (kW)	Pa (kW)	Fw (m³/h)	Pf (kW)	Pa (kW)	Fw (m³/h)	Pf (kW)	Pa (kW)	Fw (m³/h)	Pf (kW)	Pa (kW)	Fw (m³/h)	(°C)
20%	0	952,2	294,4	173,2	871,6	328,0	158,5	839,6	341,9	152,7	806,5	359,3	146,7	783,9	371,4	142,6	749,3	390,2	136,3	45
20%	3	1044,6	308,8	190,0	956,7	343,3	174,0	922,1	357,4	167,7	886,2	375,3	161,2	861,3	387,8	156,6	823,9	407,1	149,8	45
20%	5	1108,7	319,1	201,6	1015,6	354,2	184,7	979,6	368,4	178,2	941,5	386,7	171,2	915,3	399,3	166,5	875,5	418,9	159,2	44
	7	1192,3	332,0	204,4	1092,9	367,9	187,4	1054,2	382,3	180,8	1013,2	400,8	173,7	985,0	413,8	168,9				42
	9	1260,3	343,5	216,2	1155,4	380,0	198,2	1115,2	394,4	191,3	1072,0	413,2	183,9	1042,7	426,3	178,9				41
	11	1329,7	355,7	228,3	1219,6	392,7	209,4	1177,9	407,1	202,2	1132,4	426,3	194,4	1101,6	439,5	189,1				40
	13	1400,7	368,7	240,6	1285,6	406,1	220,8	1242,1	420,5	213,4	1194,3	440,0	205,1							38
	15	1473,0	382,4	253,2	1352,8	420,2	232,5	1307,9	434,6	224,8										37

11202		External air temperature (°C)																		ta max
		25			32			35			38			40			43			
Glycol	tu (°C)	Pf (kW)	Pa (kW)	Fw (m³/h)	Pf (kW)	Pa (kW)	Fw (m³/h)	Pf (kW)	Pa (kW)	Fw (m³/h)	Pf (kW)	Pa (kW)	Fw (m³/h)	Pf (kW)	Pa (kW)	Fw (m³/h)	Pf (kW)	Pa (kW)	Fw (m³/h)	(°C)
20%	0	1043,7	324,4	189,8	952,7	357,0	173,3	916,3	370,3	166,6	878,4	386,6	159,7	852,7	397,7	155,1	812,9	415,1	147,8	45
20%	3	1146,0	340,0	208,4	1046,9	373,5	190,4	1008,0	386,8	183,3	966,8	403,5	175,8	938,6	414,9	170,7	895,2	432,5	162,8	45
20%	5	1216,9	351,3	221,3	1112,4	385,3	202,3	1071,5	398,7	194,8	1028,1	415,6	187,0	998,4	427,1	181,6	952,7	445,0	173,2	44
	7	1310,2	365,8	224,6	1198,2	400,5	205,4	1154,5	414,0	197,9	1107,2	431,3	189,8	1075,3	443,0	184,4	1026,4	461,2	176,0	43
	9	1386,0	378,9	237,8	1267,6	414,0	217,5	1222,2	427,6	209,7	1172,7	445,1	201,2	1139,1	457,0	195,4				42
	11	1462,9	392,9	251,1	1339,1	428,5	229,9	1291,7	442,1	221,7	1239,6	459,9	212,8	1204,2	471,9	206,7				40
	13	1542,0	407,8	264,8	1411,9	444,0	242,5	1363,2	457,5	234,1	1308,2	475,6	224,7							39
	15	1622,6	423,7	278,8	1486,9	460,3	255,5	1435,8	473,9	246,7										37

12802		External air temperature (°C)																		ta max
		25			32			35			38			40			43			
Glycol	tu (°C)	Pf (kW)	Pa (kW)	Fw (m³/h)	Pf (kW)	Pa (kW)	Fw (m³/h)	Pf (kW)	Pa (kW)	Fw (m³/h)	Pf (kW)	Pa (kW)	Fw (m³/h)	Pf (kW)	Pa (kW)	Fw (m³/h)	Pf (kW)	Pa (kW)	Fw (m³/h)	(°C)
20%	0	1157,5	357,1	210,5	1054,4	391,6	191,8	1013,2	405,5	184,3	970,5	422,7	176,5	941,9	434,6	171,3	898,0	453,2	163,3	45
20%	3	1269,0	373,6	230,8	1156,3	408,4	210,3	1112,1	422,2	202,2	1065,5	439,5	193,8	1033,8	451,5	188,0	985,8	469,9	179,3	45
20%	5	1345,6	385,5	244,7	1226,6	420,3	223,1	1179,8	434,1	214,6	1130,9	451,4	205,6	1097,4	463,3	199,6	1046,7	481,7	190,3	45
	7	1445,3	399,8	247,8	1317,3	434,9	225,9	1267,3	448,7	217,3	1214,2	466,1	208,2	1178,0	478,0	202,0	1123,3	496,4	192,6	43
	9	1526,3	413,0	261,9	1390,9	448,1	238,6	1339,5	461,7	229,8	1283,0	479,1	220,1	1244,7	491,1	213,5				42
	11	1608,9	426,9	276,2	1466,5	462,0	251,7	1412,2	475,4	242,4	1352,9	492,9	232,2	1313,0	504,8	225,4				41
	13	1692,4	441,5	290,7	1543,4	476,7	265,1	1486,8	489,8	255,4	1424,4	507,3	244,6							39
	15	1777,9	456,9	305,5	1621,0	492,0	278,6	1563,2	504,9	268,6	1497,5	522,5	257,3							38

Data declared according to UNI EN 14511:2018. All data refers to standard units without accessories/options which require an electrical feeding source and in nominal working conditions.

tu: outlet water temperature;

ta: external air temperature. When the external air temperature is higher than the "t max" the chiller doesn't stop but the "unloading" system capacity control is activated;

Pf: cooling capacity;

Pa: total absorbed power;

Fw: water flow rate with ΔT = 5 °C.

The performances have been calculated with 20% ethylene glycol in the water.

Interpolation is allowed. Extrapolation is not permitted. To calculate Pf, Pa and Fw for ΔT ≠ 5 °C to examine the table "Correction factors for ΔT ≠ 5 °C".

PERFORMANCE DATA

Version: **SSN**

2501		External air temperature (°C)																		ta max
		25			32			35			38			40			43			
Glycol	tu (°C)	Pf (kW)	Pa (kW)	Fw (m³/h)	Pf (kW)	Pa (kW)	Fw (m³/h)	Pf (kW)	Pa (kW)	Fw (m³/h)	Pf (kW)	Pa (kW)	Fw (m³/h)	Pf (kW)	Pa (kW)	Fw (m³/h)	Pf (kW)	Pa (kW)	Fw (m³/h)	(°C)
20%	0	206,4	77,6	37,6	185,4	86,7	33,7	177,3	90,5	32,2	170,2	94,6	31,0	167,5	96,8	30,5	161,3	101,4	29,3	46
20%	3	225,4	82,2	41,0	202,6	91,5	36,9	193,9	95,3	35,3	189,7	98,3	34,5	186,4	101,0	33,9	177,2	106,1	32,2	46
20%	5	238,5	85,5	43,4	214,4	95,0	39,0	208,1	97,6	37,9	203,7	100,8	37,1	198,8	103,9	36,2	188,1	109,4	34,2	46
	7	255,5	89,7	43,8	231,8	98,6	39,8	227,1	100,8	39,0	221,2	104,5	37,9	213,8	108,0	36,7	202,3	113,6	34,7	45
	9	269,0	93,4	46,2	247,9	101,2	42,6	242,9	103,4	41,7	233,8	107,9	40,1	225,9	111,5	38,8	213,8	117,1	36,7	44
	11	282,8	97,1	48,6	265,6	103,4	45,6	258,8	106,4	44,5	246,7	111,5	42,4	238,4	115,1	40,9	225,7	120,8	38,8	43
	13	296,9	101,1	51,0	282,4	106,8	48,5	272,6	110,0	46,9	259,7	115,2	44,6	251,1	118,8	43,1				42
	15	317,2	103,2	54,5	298,5	110,0	51,3	286,6	113,8	49,3	273,1	119,0	47,0	263,9	122,7	45,4				40

3201		External air temperature (°C)																		ta max
		25			32			35			38			40			43			
Glycol	tu (°C)	Pf (kW)	Pa (kW)	Fw (m³/h)	Pf (kW)	Pa (kW)	Fw (m³/h)	Pf (kW)	Pa (kW)	Fw (m³/h)	Pf (kW)	Pa (kW)	Fw (m³/h)	Pf (kW)	Pa (kW)	Fw (m³/h)	Pf (kW)	Pa (kW)	Fw (m³/h)	(°C)
20%	0	276,6	108,5	50,3	249,0	120,0	45,3	240,0	123,9	43,7	235,1	127,6	42,8	231,1	130,8	42,0	219,3	137,2	39,9	46
20%	3	301,5	114,5	54,9	273,1	125,5	49,7	267,0	128,5	48,6	261,5	132,5	47,6	253,0	136,7	46,0	240,2	143,3	43,7	45
20%	5	318,6	118,8	58,0	292,2	128,9	53,2	286,3	131,6	52,1	277,0	136,7	50,4	268,0	141,0	48,8	254,3	147,6	46,3	44
	7	340,8	124,5	58,5	319,2	132,7	54,7	312,0	136,0	53,5	297,5	142,2	51,0	287,6	146,5	49,3	272,8	153,3	46,8	43
	9	358,1	129,5	61,5	340,8	136,3	58,5	329,1	140,6	56,5	313,6	146,9	53,8	303,2	151,4	52,0				42
	11	381,9	132,7	65,6	360,4	140,9	61,9	346,3	145,5	59,5	330,0	152,0	56,7	319,1	156,5	54,8				40
	13	406,5	136,7	69,8	378,4	146,2	65,0	363,6	150,9	62,5	346,5	157,4	59,5							39
	15	433,4	140,4	74,5	396,5	151,9	68,2	381,3	156,6	65,5	363,3	163,2	62,4							38

3601		External air temperature (°C)																		ta max
		25			32			35			38			40			43			
Glycol	tu (°C)	Pf (kW)	Pa (kW)	Fw (m³/h)	Pf (kW)	Pa (kW)	Fw (m³/h)	Pf (kW)	Pa (kW)	Fw (m³/h)	Pf (kW)	Pa (kW)	Fw (m³/h)	Pf (kW)	Pa (kW)	Fw (m³/h)	Pf (kW)	Pa (kW)	Fw (m³/h)	(°C)
20%	0	343,2	116,1	62,5	310,7	129,0	56,5	298,2	134,2	54,3	286,1	140,3	52,1	281,5	143,6	51,2	274,0	149,6	49,8	46
20%	3	375,5	122,0	68,3	340,0	134,9	61,9	326,5	140,1	59,4	317,9	144,8	57,8	313,5	148,1	57,0	301,0	155,0	54,8	46
20%	5	397,8	126,2	72,4	360,4	139,1	65,5	347,7	143,5	63,2	340,3	148,4	61,9	335,6	151,7	61,1	319,6	158,9	58,1	46
	7	427,3	131,9	73,3	386,8	144,8	66,3	379,3	147,6	65,1	371,2	152,7	63,7	361,3	156,9	62,0	343,9	164,0	59,0	46
	9	450,2	136,8	77,3	413,4	148,0	70,9	404,5	151,7	69,4	394,1	156,8	67,6	381,8	161,4	65,5	363,5	168,5	62,4	45
	11	473,5	142,0	81,3	441,1	151,8	75,7	432,6	155,0	74,3	415,7	161,6	71,4	402,8	166,2	69,2	383,4	173,3	65,8	44
	13	497,1	147,6	85,4	469,9	156,0	80,7	457,8	160,1	78,6	437,8	166,7	75,2	424,1	171,3	72,9	403,7	178,4	69,3	43
	15	524,0	152,6	90,1	499,8	160,7	85,9	481,3	165,5	82,7	460,1	172,2	79,1	445,9	176,7	76,6				41

Data declared according to UNI EN 14511:2018. All data refers to standard units without accessories/options which require an electrical feeding source and in nominal working conditions.
tu: outlet water temperature;
ta: external air temperature. When the external air temperature is higher than the "t max" the chiller doesn't stop but the "unloading" system capacity control is activated;
Pf: cooling capacity;
Pa: total absorbed power;
Fw: water flow rate with ΔT = 5 °C.
The performances have been calculated with 20% ethylene glycol in the water.
Interpolation is allowed. Extrapolation is not permitted. To calculate Pf, Pa and Fw for ΔT ≠ 5 °C to examine the table "Correction factors for ΔT ≠ 5 °C".

4302		External air temperature (°C)																		ta max
		25			32			35			38			40			43			
Glycol	tu	Pf	Pa	Fw	Pf	Pa	Fw	Pf	Pa	Fw	Pf	Pa	Fw	Pf	Pa	Fw	Pf	Pa	Fw	
	(°C)	(kW)	(kW)	(m³/h)	(kW)	(kW)	(m³/h)	(kW)	(kW)	(m³/h)	(kW)	(kW)	(m³/h)	(kW)	(kW)	(m³/h)	(kW)	(kW)	(m³/h)	(°C)
20%	0	368,5	149,9	67,1	328,3	166,0	59,7	315,0	171,4	57,3	306,9	176,6	55,8	301,7	180,3	54,9	284,4	188,9	51,7	46
20%	3	400,6	157,8	72,9	358,0	174,1	65,1	350,6	177,5	63,8	342,0	183,4	62,2	331,4	188,2	60,3	313,3	196,6	57,0	46
20%	5	422,6	163,8	76,9	385,5	177,5	70,1	376,6	181,8	68,5	364,7	188,3	66,4	352,1	193,9	64,1	333,1	202,4	60,6	45
	7	451,2	171,8	77,4	420,3	183,5	72,1	411,8	187,3	70,6	392,0	196,0	67,2	378,8	201,6	65,0	358,8	210,3	61,5	43
	9	474,3	179,3	81,4	449,6	189,1	77,2	434,9	194,6	74,6	414,5	203,0	71,1	400,7	208,8	68,8				42
	11	504,5	185,4	86,6	477,3	196,0	82,0	458,7	202,3	78,8	437,6	211,0	75,1	423,2	216,9	72,7				41
	13	539,1	191,3	92,6	502,0	204,7	86,3	483,0	211,0	83,0	460,9	219,8	79,2							39
	15	573,5	199,1	98,6	527,3	214,4	90,7	507,7	220,7	87,3	485,1	229,7	83,4							38

5002		External air temperature (°C)																		ta max
		25			32			35			38			40			43			
Glycol	tu	Pf	Pa	Fw	Pf	Pa	Fw	Pf	Pa	Fw	Pf	Pa	Fw	Pf	Pa	Fw	Pf	Pa	Fw	
	(°C)	(kW)	(kW)	(m³/h)	(kW)	(kW)	(m³/h)	(kW)	(kW)	(m³/h)	(kW)	(kW)	(m³/h)	(kW)	(kW)	(m³/h)	(kW)	(kW)	(m³/h)	(°C)
20%	0	436,6	155,1	79,4	392,5	173,5	71,4	375,4	181,1	68,3	360,4	189,2	65,6	354,6	193,6	64,5	341,7	202,8	62,2	46
20%	3	476,8	164,3	86,7	428,9	183,1	78,0	410,5	190,7	74,7	400,8	197,2	72,9	394,6	202,0	71,8	375,2	212,2	68,2	46
20%	5	504,3	170,9	91,7	453,7	189,9	82,5	440,8	195,1	80,2	431,5	201,5	78,5	420,9	207,8	76,6	398,4	218,7	72,5	46
	7	540,2	179,4	92,6	490,6	197,1	84,1	480,8	201,4	82,4	468,3	208,9	80,3	452,5	216,0	77,6	428,3	227,1	73,4	45
	9	568,9	186,6	97,6	524,8	202,1	90,1	514,3	206,6	88,2	494,8	215,8	84,9	478,2	222,9	82,0	452,8	234,2	77,7	44
	11	598,0	194,1	102,7	560,2	207,5	96,2	547,9	212,6	94,1	522,1	222,9	89,6	504,4	230,1	86,6	477,7	241,5	82,0	43
	13	627,3	201,9	107,8	597,6	213,2	102,7	577,0	219,8	99,1	549,8	230,2	94,5	531,5	237,5	91,3				42
	15	668,1	207,1	114,8	631,0	219,9	108,5	606,5	227,4	104,2	578,2	237,8	99,4	558,7	245,3	96,0				40

5602		External air temperature (°C)																		ta max
		25			32			35			38			40			43			
Glycol	tu	Pf	Pa	Fw	Pf	Pa	Fw	Pf	Pa	Fw	Pf	Pa	Fw	Pf	Pa	Fw	Pf	Pa	Fw	
	(°C)	(kW)	(kW)	(m³/h)	(kW)	(kW)	(m³/h)	(kW)	(kW)	(m³/h)	(kW)	(kW)	(m³/h)	(kW)	(kW)	(m³/h)	(kW)	(kW)	(m³/h)	(°C)
20%	0	478,2	186,5	87,0	427,7	208,5	77,8	413,5	215,1	75,2	404,1	222,2	73,5	394,5	228,9	71,8	371,8	241,7	67,6	46
20%	3	520,0	198,2	94,6	471,3	218,1	85,7	461,4	223,0	83,9	447,7	232,2	81,4	431,6	240,5	78,5	406,7	253,7	74,0	45
20%	5	548,4	206,5	99,7	505,5	223,8	91,9	493,6	229,8	89,8	473,9	240,2	86,2	456,9	248,6	83,1	430,7	262,2	78,3	44
	7	584,2	217,1	100,2	549,2	231,4	94,2	533,7	238,1	91,5	507,0	250,3	86,9	488,5	259,0	83,8				42
	9	617,6	224,6	106,0	586,5	237,7	100,6	562,4	246,5	96,5	534,3	259,0	91,7	515,0	267,8	88,4				41
	11	658,6	230,7	113,1	616,7	246,5	105,9	591,5	255,4	101,5	561,8	268,1	96,4	541,9	277,0	93,0				40
	13	701,0	237,2	120,4	647,2	255,7	111,2	621,3	264,6	106,7	590,0	277,5	101,3							38
	15	747,7	243,0	128,5	678,2	265,2	116,6	651,3	274,2	111,9										37

Data declared according to UNI EN 14511:2018. All data refers to standard units without accessories/options which require an electrical feeding source and in nominal working conditions.
tu: outlet water temperature;
ta: external air temperature. When the external air temperature is higher than the "t max" the chiller doesn't stop but the "unloading" system capacity control is activated;
Pf: cooling capacity;
Pa: total absorbed power;
Fw: water flow rate with ΔT = 5 °C.
The performances have been calculated with 20% ethylene glycol in the water.
Interpolation is allowed. Extrapolation is not permitted. To calculate Pf, Pa and Fw for ΔT ≠ 5 °C to examine the table "Correction factors for ΔT ≠ 5 °C".

6002		External air temperature (°C)																		ta max
		25			32			35			38			40			43			
Glycol	tu	Pf	Pa	Fw	Pf	Pa	Fw	Pf	Pa	Fw	Pf	Pa	Fw	Pf	Pa	Fw	Pf	Pa	Fw	
	(°C)	(kW)	(kW)	(m³/h)	(kW)	(kW)	(m³/h)	(kW)	(kW)	(m³/h)	(kW)	(kW)	(m³/h)	(kW)	(kW)	(m³/h)	(kW)	(kW)	(m³/h)	(°C)
20%	0	546,3	196,4	99,4	492,1	218,3	89,5	473,2	226,3	86,1	458,2	235,1	83,3	449,2	241,6	81,7	431,3	252,6	78,4	46
20%	3	596,0	207,6	108,4	538,7	229,3	98,0	522,3	236,2	95,0	509,0	244,5	92,6	496,4	251,4	90,3	472,8	263,9	86,0	45
20%	5	630,1	215,5	114,6	574,0	236,1	104,4	558,2	242,6	101,5	542,1	251,9	98,6	528,7	258,9	96,2	501,4	271,9	91,2	44
	7	673,9	225,9	115,5	620,9	244,7	106,5	607,1	250,5	104,1	585,5	261,0	100,4	567,4	269,0	97,3	537,9	282,2	92,2	43
	9	708,9	234,9	121,6	663,4	251,0	113,8	644,5	258,1	110,6	619,4	269,2	106,3	598,9	277,7	102,7				42
	11	752,1	242,0	129,1	703,7	258,9	120,8	682,8	266,2	117,2	652,4	278,3	112,0	630,9	286,9	108,3				40
	13	795,2	250,3	136,6	744,1	267,4	127,8	719,6	275,4	123,6	686,1	287,9	117,8							39
	15	842,0	258,6	144,7	785,5	276,4	135,0	755,5	285,4	129,8										37

6402		External air temperature (°C)																		ta max
		25			32			35			38			40			43			
Glycol	tu	Pf	Pa	Fw	Pf	Pa	Fw	Pf	Pa	Fw	Pf	Pa	Fw	Pf	Pa	Fw	Pf	Pa	Fw	
	(°C)	(kW)	(kW)	(m³/h)	(kW)	(kW)	(m³/h)	(kW)	(kW)	(m³/h)	(kW)	(kW)	(m³/h)	(kW)	(kW)	(m³/h)	(kW)	(kW)	(m³/h)	(°C)
20%	0	578,9	218,4	105,3	522,6	241,8	95,0	505,1	249,3	91,9	494,9	256,8	90,0	485,5	263,5	88,3	461,0	276,5	83,9	45
20%	3	629,7	230,3	114,5	571,8	252,9	104,0	560,7	258,2	102,0	548,3	266,7	99,7	530,5	275,3	96,5	503,7	288,6	91,6	45
20%	5	664,4	238,9	120,8	612,2	258,9	111,3	600,4	264,3	109,2	580,0	274,9	105,5	561,1	283,6	102,0	532,9	297,2	96,9	44
	7	709,1	250,2	121,6	667,1	266,0	114,4	650,8	273,1	111,6	621,0	285,8	106,5	600,9	294,6	103,0				42
	9	744,3	260,0	127,7	709,4	274,2	121,7	685,4	282,3	117,6	654,0	295,2	112,2	632,8	304,1	108,6				41
	11	792,7	266,7	136,1	749,1	282,7	128,6	720,4	292,1	123,7	687,2	305,2	118,0							39
	13	845,4	272,9	145,2	785,8	293,1	135,0	755,9	302,6	129,8	720,7	316,0	123,8							38
	15	896,8	281,2	154,1	822,4	304,5	141,3	791,3	314,0	136,0										37

7202		External air temperature (°C)																		ta max
		25			32			35			38			40			43			
Glycol	tu	Pf	Pa	Fw	Pf	Pa	Fw	Pf	Pa	Fw	Pf	Pa	Fw	Pf	Pa	Fw	Pf	Pa	Fw	
	(°C)	(kW)	(kW)	(m³/h)	(kW)	(kW)	(m³/h)	(kW)	(kW)	(m³/h)	(kW)	(kW)	(m³/h)	(kW)	(kW)	(m³/h)	(kW)	(kW)	(m³/h)	(°C)
20%	0	667,7	244,2	121,4	603,4	270,9	109,7	582,1	280,0	105,9	569,3	289,3	103,5	561,2	296,0	102,1	534,1	311,2	97,1	45
20%	3	726,7	257,0	132,2	657,1	283,6	119,5	644,5	289,3	117,2	630,4	299,5	114,6	613,5	307,8	111,6	583,7	322,8	106,2	45
20%	5	766,6	266,1	139,4	703,3	289,2	127,9	689,7	295,3	125,4	670,0	306,6	121,9	649,2	316,1	118,1	617,4	331,1	112,3	45
	7	818,4	277,9	140,3	764,0	297,4	131,0	747,3	304,9	128,1	717,3	317,3	123,0	694,7	326,8	119,1	660,8	341,7	113,3	43
	9	859,3	288,2	147,4	814,1	304,6	139,7	791,0	313,0	135,7	755,8	326,7	129,7	731,9	336,2	125,6				42
	11	906,0	297,8	155,5	864,3	313,1	148,4	831,6	323,1	142,8	794,6	336,7	136,4	769,5	346,2	132,1				41
	13	966,2	304,4	166,0	906,7	323,8	155,8	872,8	333,6	149,9	833,4	347,4	143,2	807,2	357,0	138,6				40
	15	1025,2	313,2	176,2	949,3	335,3	163,1	914,5	345,1	157,2	873,1	358,8	150,1							38

Data declared according to UNI EN 14511:2018. All data refers to standard units without accessories/options which require an electrical feeding source and in nominal working conditions.
tu: outlet water temperature;
ta: external air temperature. When the external air temperature is higher than the "t max" the chiller doesn't stop but the "unloading" system capacity control is activated;
Pf: cooling capacity;
Pa: total absorbed power;
Fw: water flow rate with ΔT = 5 °C.
The performances have been calculated with 20% ethylene glycol in the water.
Interpolation is allowed. Extrapolation is not permitted. To calculate Pf, Pa and Fw for ΔT ≠ 5 °C to examine the table "Correction factors for ΔT ≠ 5 °C".

8402		External air temperature (°C)																		ta max
		25			32			35			38			40			43			
Glycol	tu	Pf	Pa	Fw	Pf	Pa	Fw	Pf	Pa	Fw	Pf	Pa	Fw	Pf	Pa	Fw	Pf	Pa	Fw	
	(°C)	(kW)	(kW)	(m³/h)	(kW)	(kW)	(m³/h)	(kW)	(kW)	(m³/h)	(kW)	(kW)	(m³/h)	(kW)	(kW)	(m³/h)	(kW)	(kW)	(m³/h)	(°C)
20%	0	776,0	285,8	141,1	705,3	317,9	128,3	685,2	327,2	124,6	671,3	339,0	122,1	659,8	347,5	120,0	629,5	365,4	114,5	45
20%	3	845,0	302,4	153,7	775,1	332,3	141,0	760,8	339,6	138,4	744,1	352,0	135,3	722,5	363,5	131,4	689,6	381,6	125,4	45
20%	5	892,5	314,1	162,3	829,8	340,4	150,9	814,8	348,0	148,2	788,1	363,2	143,3	765,5	374,9	139,2	730,9	393,1	132,9	44
	7	953,5	329,2	163,5	901,4	351,1	154,6	881,6	360,1	151,2	845,4	377,3	145,0	821,0	389,1	140,8				42
	9	1008,7	339,7	173,1	964,1	358,8	165,4	930,3	372,2	159,6	892,2	389,5	153,1	866,6	401,5	148,7				41
	11	1071,6	349,4	184,0	1015,0	372,2	174,3	980,1	384,8	168,2	940,4	402,3	161,4	913,4	414,3	156,8				40
	13	1139,9	358,7	195,8	1067,2	385,4	183,3	1030,7	398,0	177,0	989,0	415,7	169,9							39
	15	1210,7	368,9	208,1	1119,8	399,3	192,5	1082,6	411,8	186,1										37

9602		External air temperature (°C)																		ta max
		25			32			35			38			40			43			
Glycol	tu	Pf	Pa	Fw	Pf	Pa	Fw	Pf	Pa	Fw	Pf	Pa	Fw	Pf	Pa	Fw	Pf	Pa	Fw	
	(°C)	(kW)	(kW)	(m³/h)	(kW)	(kW)	(m³/h)	(kW)	(kW)	(m³/h)	(kW)	(kW)	(m³/h)	(kW)	(kW)	(m³/h)	(kW)	(kW)	(m³/h)	(°C)
20%	0	878,8	323,5	159,8	798,4	359,3	145,2	775,5	370,0	141,0	761,0	381,7	138,4	746,1	392,1	135,7	711,1	411,6	129,3	45
20%	3	957,5	342,4	174,1	879,8	374,8	160,0	863,5	383,1	157,0	842,0	397,9	153,1	817,2	410,7	148,6	779,0	430,7	141,7	45
20%	5	1011,4	355,7	183,9	940,0	385,8	171,0	922,9	394,3	167,8	892,5	410,8	162,3	866,1	423,8	157,5	825,9	444,2	150,2	44
	7	1080,8	372,7	185,3	1023,8	396,5	175,5	998,9	407,6	171,3	957,3	427,0	164,1	928,9	440,3	159,3				42
	9	1143,3	384,9	196,1	1092,7	407,1	187,5	1054,0	421,4	180,8	1010,1	441,0	173,3	980,6	454,6	168,2				41
	11	1217,8	394,5	209,1	1150,6	421,5	197,5	1110,5	435,9	190,6	1064,7	455,7	182,8	1033,5	469,4	177,4				40
	13	1296,1	405,2	222,6	1209,4	436,7	207,7	1167,7	451,1	200,6	1119,8	471,2	192,3							38
	15	1377,3	417,1	236,7	1269,4	452,7	218,2	1226,4	467,0	210,8										37

11202		External air temperature (°C)																		ta max
		25			32			35			38			40			43			
Glycol	tu	Pf	Pa	Fw	Pf	Pa	Fw	Pf	Pa	Fw	Pf	Pa	Fw	Pf	Pa	Fw	Pf	Pa	Fw	
	(°C)	(kW)	(kW)	(m³/h)	(kW)	(kW)	(m³/h)	(kW)	(kW)	(m³/h)	(kW)	(kW)	(m³/h)	(kW)	(kW)	(m³/h)	(kW)	(kW)	(m³/h)	(°C)
20%	0	961,9	351,1	174,9	871,3	384,4	158,5	840,9	395,5	152,9	822,3	407,6	149,5	810,9	416,0	147,5	770,3	433,9	140,1	45
20%	3	1049,2	370,7	190,8	956,5	402,5	173,9	936,1	411,1	170,2	917,7	423,1	166,9	889,3	435,2	161,7	845,6	453,2	153,8	45
20%	5	1109,3	384,8	201,7	1022,8	414,3	186,0	1003,9	422,4	182,6	973,8	437,0	177,1	943,8	448,8	171,6	897,6	466,9	163,2	44
	7	1186,2	403,1	203,4	1115,6	427,2	191,3	1092,7	436,9	187,3	1045,4	454,4	179,2	1013,1	466,3	173,7	963,6	484,7	165,2	43
	9	1248,0	419,4	214,1	1192,1	440,1	204,5	1153,4	452,1	197,9	1104,0	469,8	189,4	1070,1	481,9	183,6				42
	11	1330,9	430,9	228,5	1262,0	455,0	216,6	1216,2	468,1	208,8	1163,9	486,1	199,8	1128,5	498,3	193,7				40
	13	1417,0	444,6	243,4	1327,0	472,1	227,9	1279,6	485,3	219,8	1225,0	503,4	210,4							39
	15	1510,7	457,2	259,6	1393,2	490,4	239,4	1344,8	503,4	231,1										37

12802		External air temperature (°C)																		ta max
		25			32			35			38			40			43			
Glycol	tu	Pf	Pa	Fw	Pf	Pa	Fw	Pf	Pa	Fw	Pf	Pa	Fw	Pf	Pa	Fw	Pf	Pa	Fw	
	(°C)	(kW)	(kW)	(m³/h)	(kW)	(kW)	(m³/h)	(kW)	(kW)	(m³/h)	(kW)	(kW)	(m³/h)	(kW)	(kW)	(m³/h)	(kW)	(kW)	(m³/h)	(°C)
20%	0	1063,9	385,2	193,5	962,5	420,3	175,0	928,8	432,0	168,9	908,6	445,0	165,2	895,9	454,2	162,9	852,3	473,6	155,0	45
20%	3	1158,2	405,2	210,6	1053,9	438,1	191,7	1030,8	447,0	187,5	1011,0	459,6	183,9	979,7	472,7	178,2	932,4	491,7	169,6	45
20%	5	1222,3	419,3	222,3	1125,0	449,0	204,6	1103,7	457,5	200,7	1069,8	473,4	194,5	1036,9	485,6	188,6	986,9	504,5	179,5	45
	7	1303,7	436,7	223,5	1221,0	462,2	209,4	1198,3	471,0	205,5	1145,0	489,4	196,3	1109,4	501,5	190,2	1055,3	520,5	180,9	43
	9	1369,3	452,3	234,9	1301,9	474,1	223,3	1262,1	485,9	216,5	1206,6	503,5	207,0	1169,0	515,6	200,6				42
	11	1453,2	464,0	249,5	1379,1	487,7	236,7	1327,6	500,7	227,9	1269,3	518,3	217,9	1229,5	530,5	211,0				41
	13	1545,1	476,5	265,4	1447,2	503,5	248,6	1394,2	516,2	239,5	1332,6	533,8	228,9							39
	15	1640,9	490,1	282,0	1516,4	520,0	260,6	1460,8	532,5	251,0	1396,7	550,1	240,0							38

Data declared according to UNI EN 14511:2018. All data refers to standard units without accessories/options which require an electrical feeding source and in nominal working conditions.

tu: outlet water temperature;

ta: external air temperature. When the external air temperature is higher than the "t max" the chiller doesn't stop but the "unloading" system capacity control is activated;

Pf: cooling capacity;

Pa: total absorbed power;

Fw: water flow rate with ΔT = 5 °C.

The performances have been calculated with 20% ethylene glycol in the water.

Interpolation is allowed. Extrapolation is not permitted. To calculate Pf, Pa and Fw for ΔT ≠ 5 °C to examine the table "Correction factors for ΔT ≠ 5 °C".

EVAPORATOR PRESSURE DROPS AND AVAILABLE HEAD PRESSURE

EVAPORATOR PRESSURE DROPS

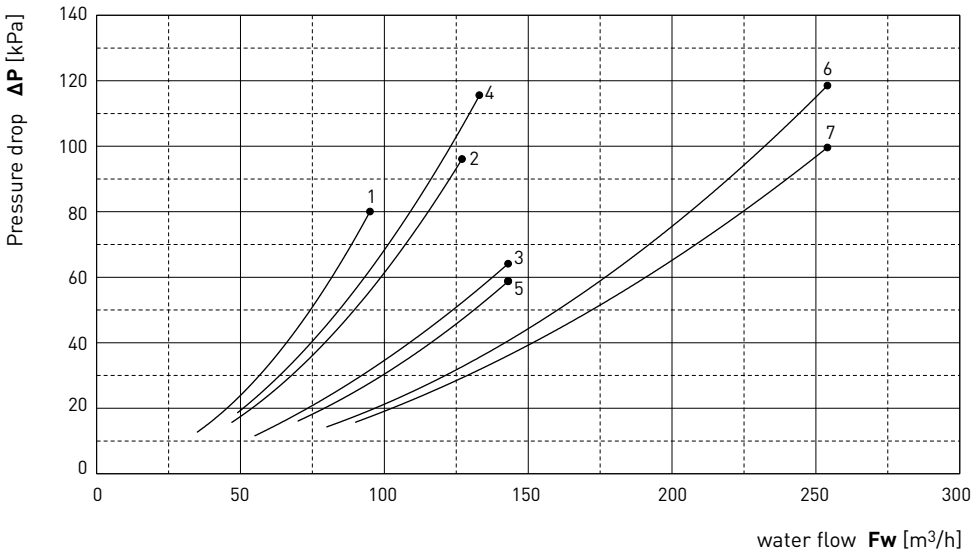

1: PNG2: 2501
2: PNG2: 3201
3: PNG2: 3601
4: PNG2: 4302
5: PNG2: 5002
6: PNG2: 5602
7: PNG2: 6002

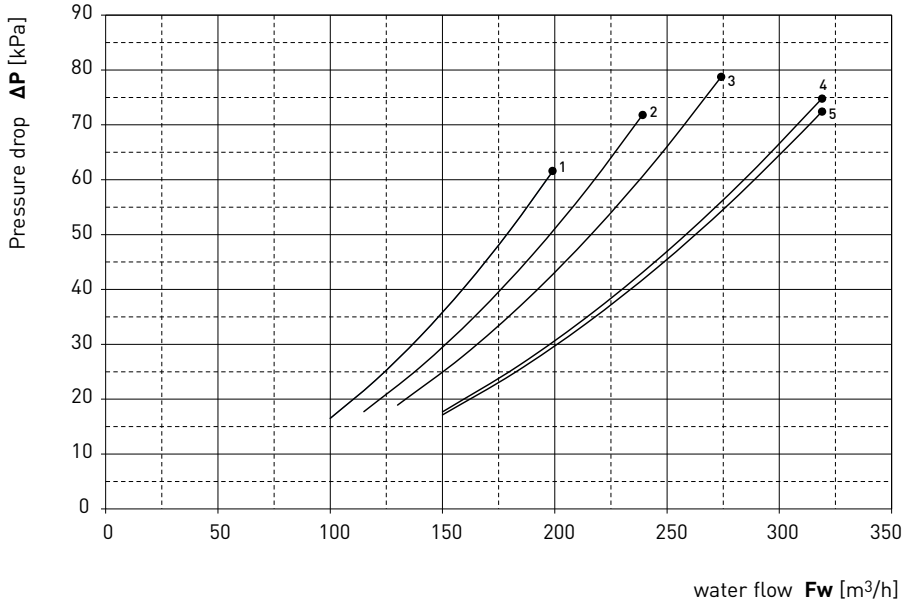

1: PNG2: 6402 - 7202
2: PNG2: 8402
3: PNG2: 9602
4: PNG2: 12802
5: PNG2: 11202

AVAILABLE HEAD PRESSURE WITH PUMP P2

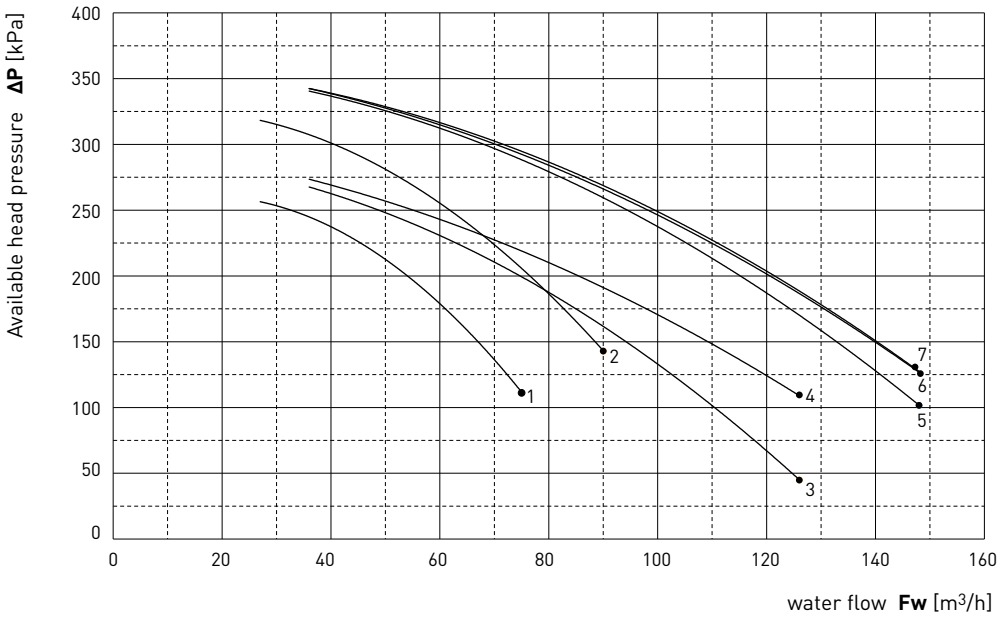

1: PNG2: 2501
2: PNG2: 3201
3: PNG2: 3601
4: PNG2: 4302
5: PNG2: 5002
6: PNG2: 5602
7: PNG2: 6002

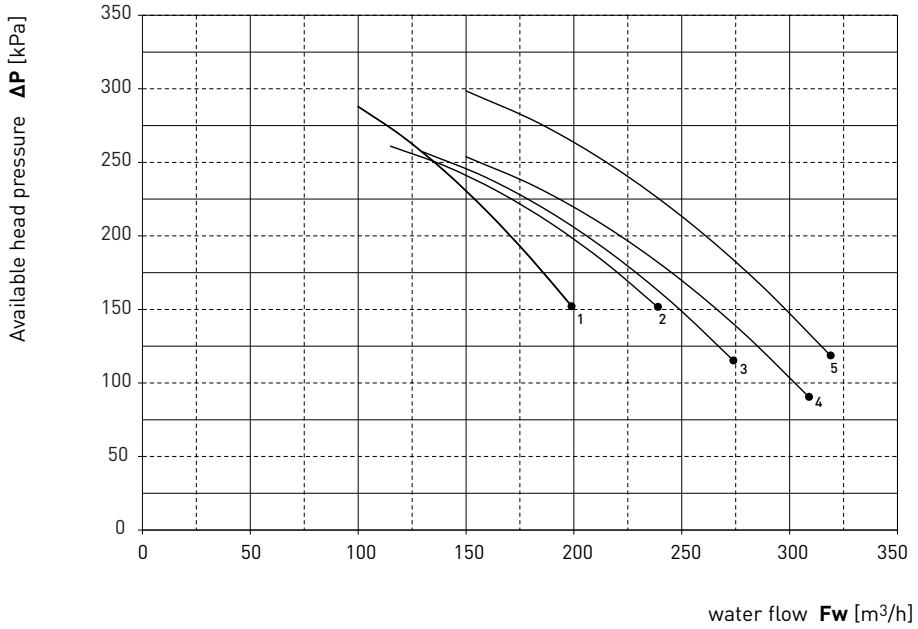

1: PNG2: 6402 - 7202
2: PNG2: 8402
3: PNG2: 9602
4: PNG2: 11202
5: PNG2: 12802

AVAILABLE HEAD PRESSURE WITH PUMP P3

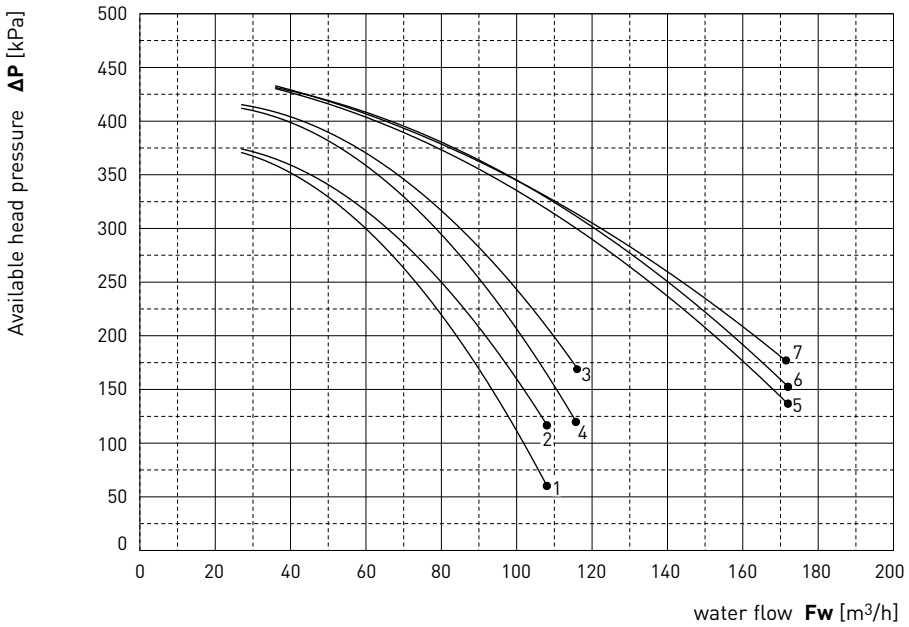

1: PNG2: 2501
2: PNG2: 3201
3: PNG2: 3601
4: PNG2: 4302
5: PNG2: 5002
6: PNG2: 5602
7: PNG2: 6002

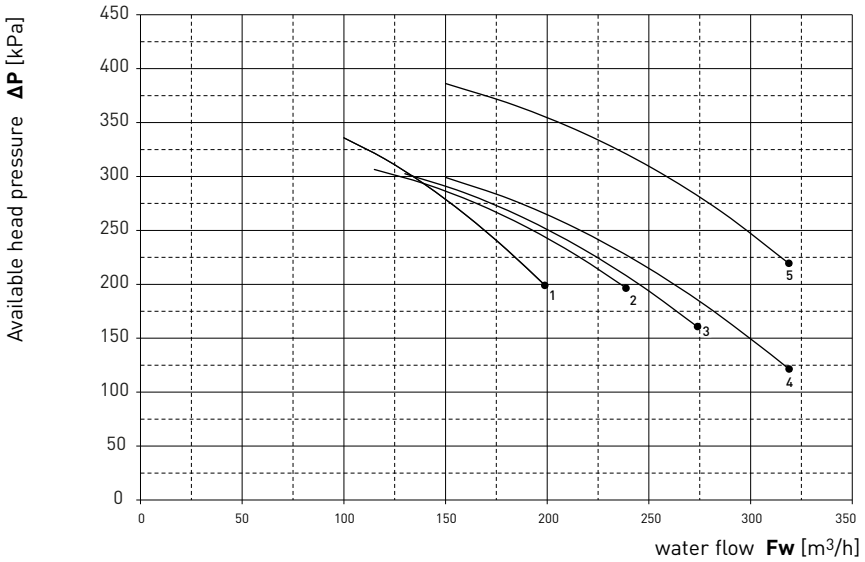

1: PNG2: 6402 - 7202
2: PNG2: 8402
3: PNG2: 9602
4: PNG2: 11202
5: PNG2: 12802

WORKING LIMITS AND CORRECTION FACTORS

WORKING LIMITS

			MIN			MAX		
			HE	SHE	SSN	HE	SHE	SSN
External air temperature	Step fans regulation	°C	0			(1)		
	EC Brushless	°C	-10					
	-20 °C option	°C	-20 [4]					
Evaporator inlet water temperature		°C	3 [2]			25		
Evaporator outlet water temperature		°C	0 [3]			20		
Delta T of the water		°C	3			8		
Pressure in hydraulic circuits water side without hydraulic group and pumps		barg	0			10		

(1) See tables with the unit's performances based on the user temperatures.
(2) With -20 °C option the units can operate in cooling mode with outdoor temperature down to -20 °C without wind. The unit is equipped with a ventilated heating element controlled by a thermostat in the electrical board, and EC fans. If antifreeze additives are not present in the plant, it is advisable to associate this with the anti-freeze heater option (see paragraph 14 options "anti-freeze heater").
(3) Please contact our sales department.
(4) For water outlet temperatures lower than 6 °C you must add a suitable quantity of antifreeze solution; for temperatures below the specified limit consult our sales department.

THERMAL INSULATION THICKNESS LIMITS

		Standard insulation thickness 10 mm *					+10 mm
Ambient temperature	10 °C	20 °C	30 °C	35 °C	40 °C	45 °C	47 °C
Outlet water temperature	Maximum relative humidity						
0 °C	90%	80%	73%	70%	67%	65%	82%
7 °C	97%	87%	77%	75%	73%	68%	83%
15 °C	99%	95%	85%	82%	78%	75%	86%

I valori riportati in tabella sono riferiti agli spessori dell'isolamento lato idraulico e indicano il limite di umidità al di sopra della quale si verifica la formazione di condensa (non sono indicativi dei limiti di funzionamento della macchina).
(*) Isolamento a celle chiuse.

SOLUTIONS OF WATER AND ETHYLENE GLYCOL

		% Ethylene glycol by weight					
		0	10	20	30	40	50
Freezing temperature	(°C)	0	-3,7	-8,7	-15,3	-23,5	-35,6
Cooling capacity correction factor	K1	1	0,995	0,988	0,980	0,971	0,959
Absorbed power correction factor	Kp1	1	0,997	0,994	0,990	0,985	0,979
Water flow correction factor [1]	KFWE1	1	1,023	1,048	1,075	1,103	1,134
Pressure drop correction factor	Kdp1	1	1,128	1,268	1,421	1,588	1,771

Multiply the unit performance by the correction factors given in the table. (e.g. Pf(new) = Pf x K1).
1) KFWE1 = correction factor (referred to the cooling capacity/heating capacity corrected by K1) to obtain the water flow with a ΔT of 5 °C.

FOULING FACTORS

		Evaporator fouling factor (m^2 °C/W)				
		0	0,000043	0,000086	0,000172	0,000344
Cooling capacity correction factor	Kf2	1	0,991	0,982	0,965	0,933
Absorbed power correction factor	Kp2	1	0,995	0,991	0,982	0,965

To determine the effect of fouling on the evaporator, multiply the cooling capacity Pf by kf2 and the absorbed power Pa by kp2.
(Pf* = Pf x kf2, Pa* = Pa x kp2).

CONDENSER CORRECTION FACTORS

		Altitude				
		0	500	1000	1500	2000
Cooling capacity correction factor	Kf3	1	0,990	0,980	0,977	0,972
Absorbed power correction factor	Kp3	1	1,005	1,012	1,018	1,027
Reduction of the maximum external air temperature (*)	Kt3 (°C)	0	0,6	1,1	1,8	2,5

Multiply the unit performance by the correction factors given in the table. (Pf* = Pf x Kf3, Pa* = Pa x Kp3).
(*) To obtain the maximum (minimum) external air temperature, subtract (add) the values indicated from (to) the maximum (minimum) external air temperature in the performance table (Ta* = Ta +(-) Kt3).

CORRECTION FACTORS ΔT ≠ 5 °C

		ΔT						
		4	5	6	7	8	9	10
Cooling capacity correction factor	K4	0,991	1,000	1,008	1,017	1,025	1,032	1,039
Absorbed power correction factor	Kp4	0,995	1,000	1,004	1,009	1,013	1,017	1,021

Multiply the unit performance by the correction factors given in table. (Pf* = Pf x Kf4, Pa* = Pa x Kp4).
The new water flow to the evaporator is calculated with the following equation: Fw (l/h) = Pf* (kW) x 860 / ΔT where ΔT is the delta T of the water through the evaporator (°C).

OVERALL DIMENSIONS

PNG2 2501

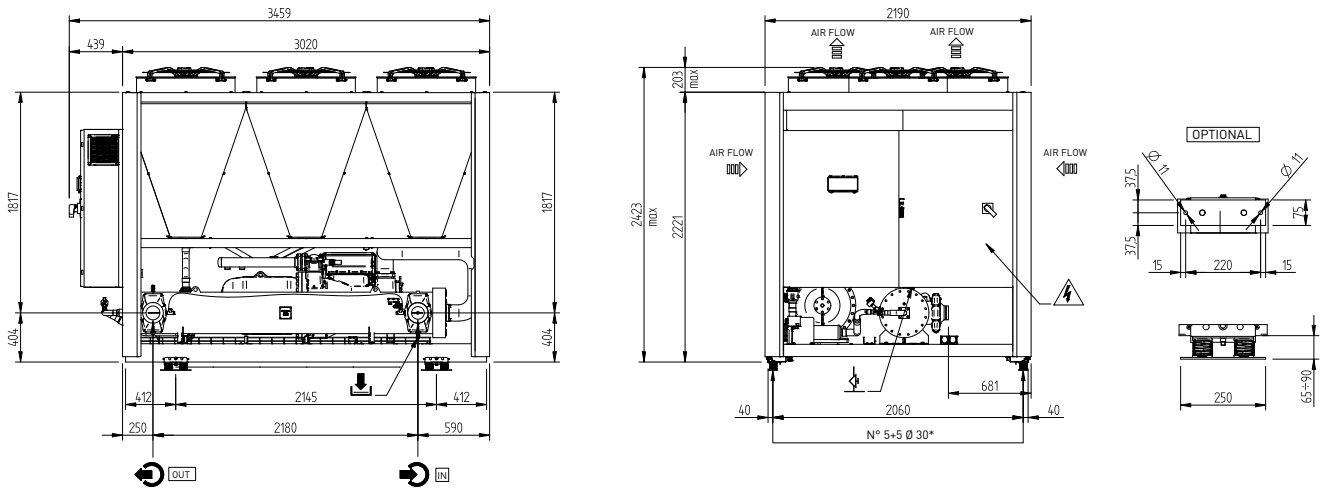

PNG2 3201

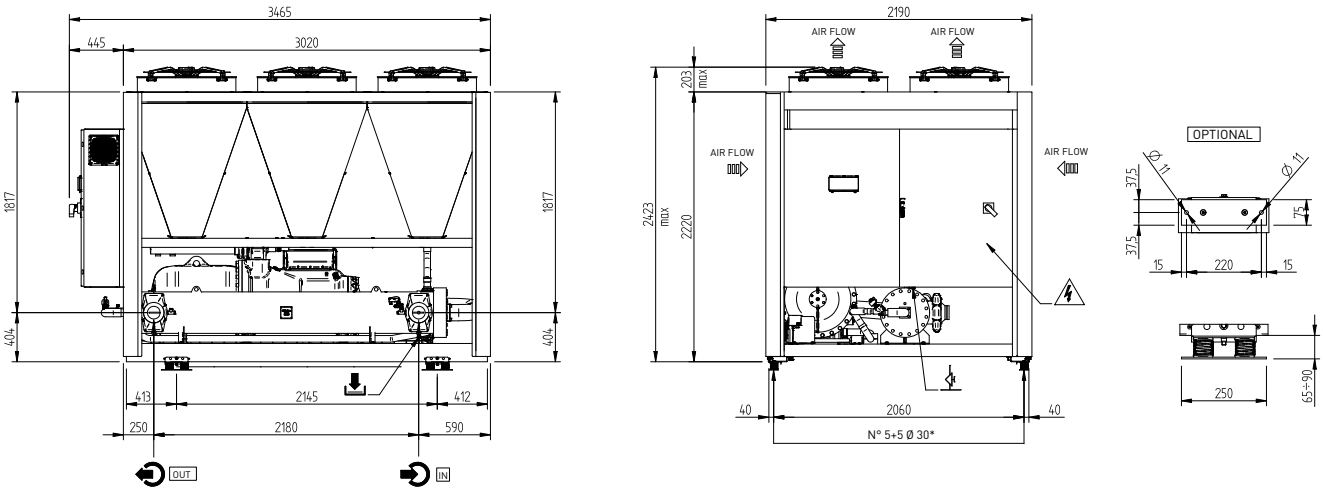

PNG2 3601

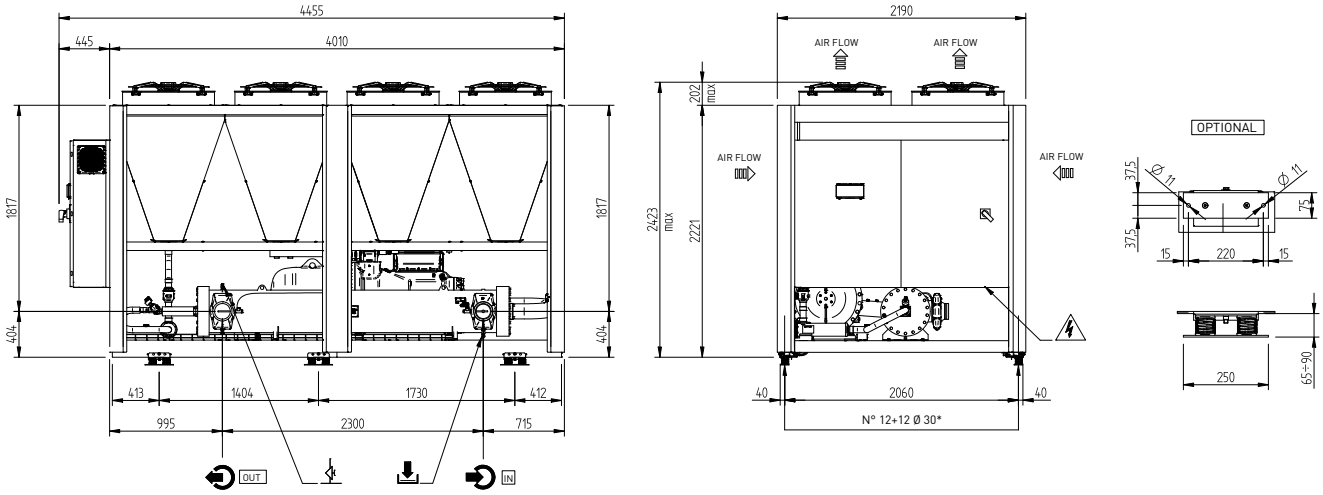

	2501	3201	3601
Water inlet	DN100	DN100	DN125
Water outlet	DN100	DN100	DN125

- Holes
- Electrical power supply
- Air flow
- Air vent = Rp 1/2"
- Water discharge = Rp 1/2"

PNG2 4302

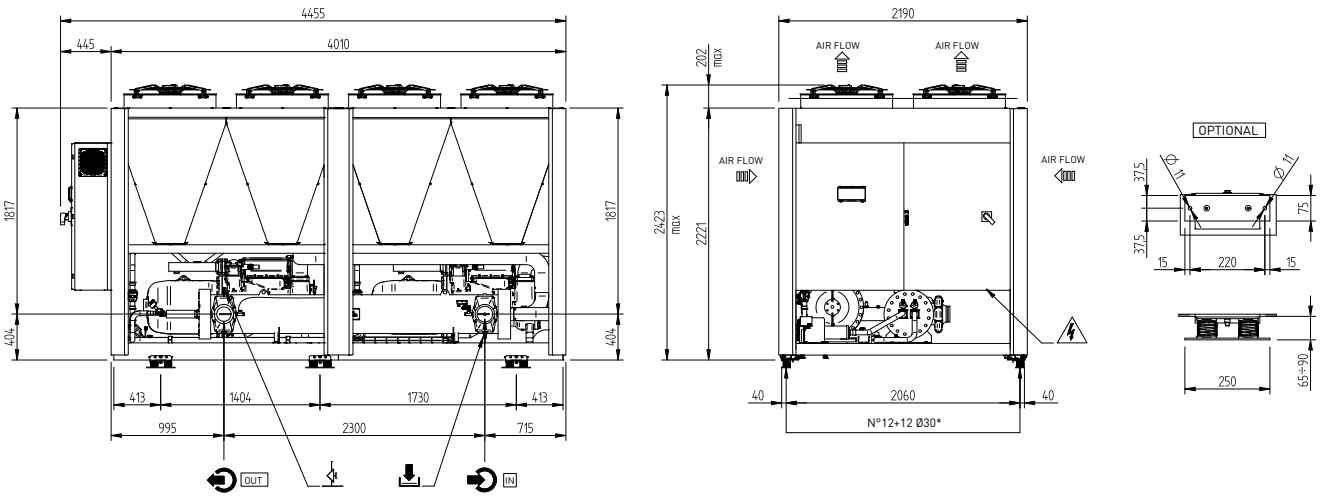

PNG2 5002

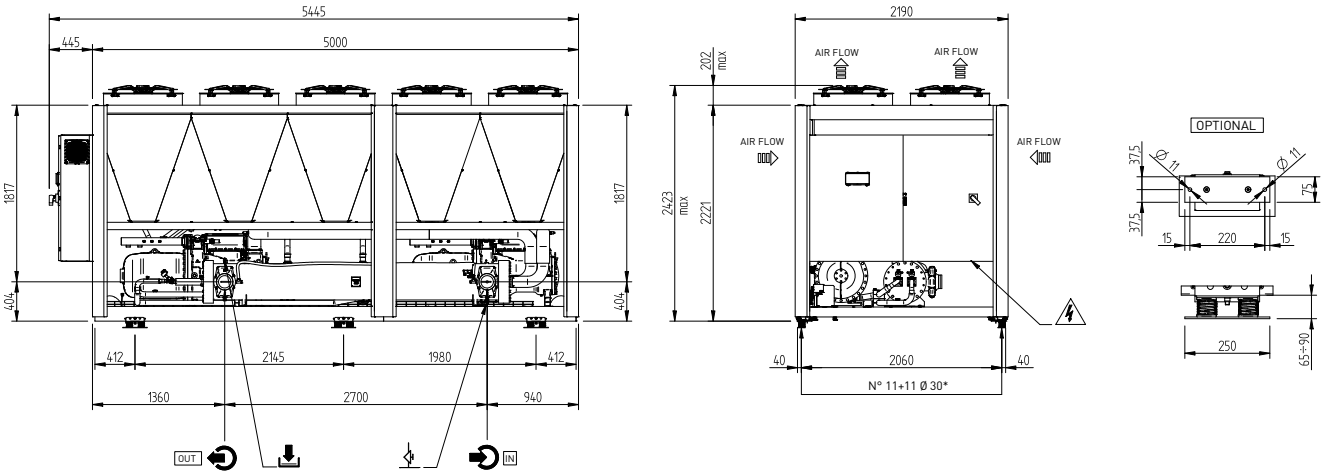

PNG2 5602

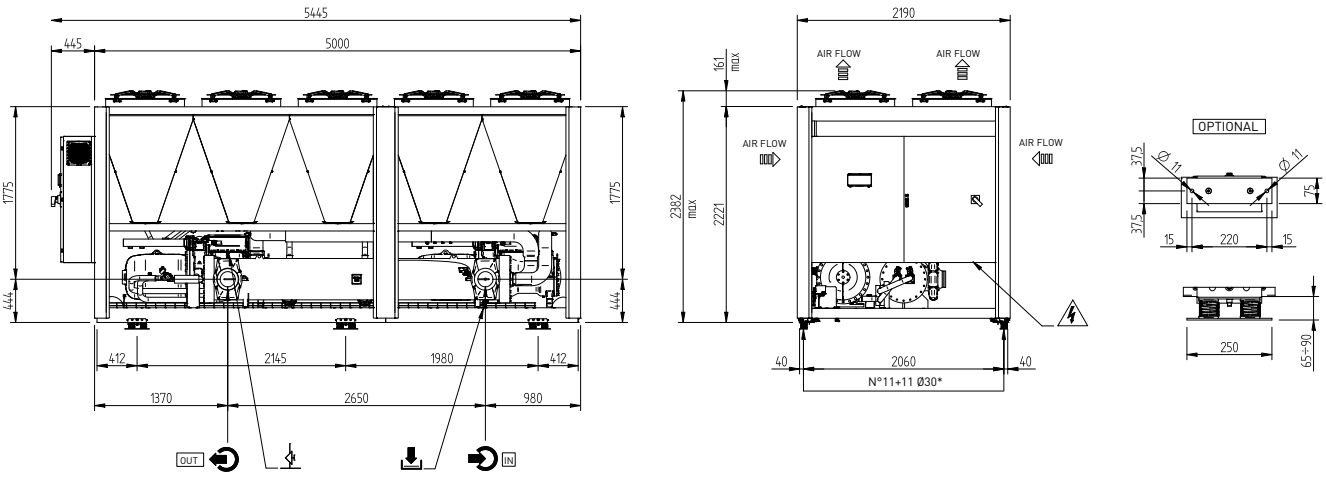

	4302	5002	5602
Water inlet	DN125	DN125	DN150
Water outlet	DN125	DN125	DN150

- * Holes
- Electrical power supply
- Air flow
- Air vent = Rp 1/2"
- Watre discharge = Rp 1/2"

PNG2 6002

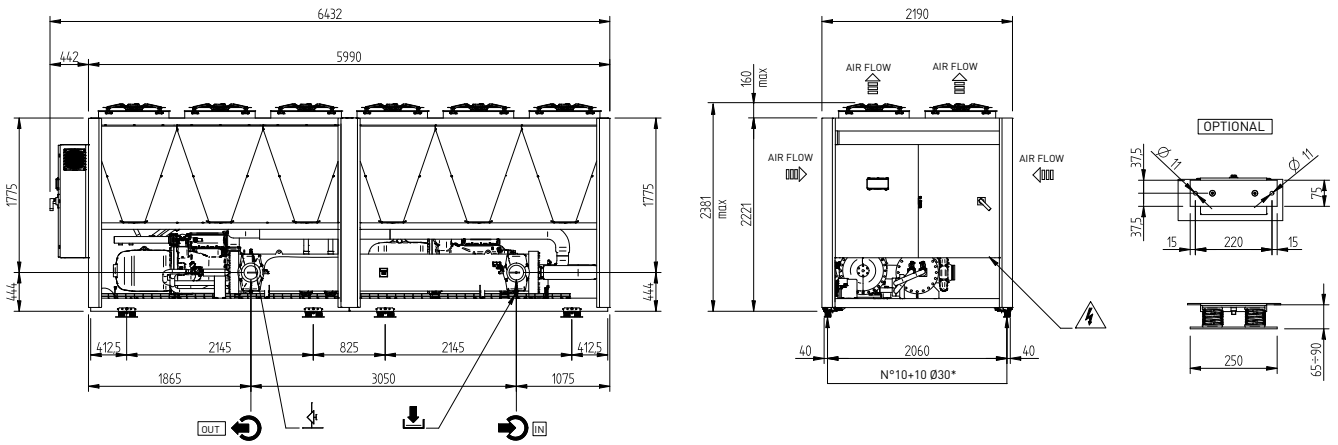

PNG2 6402

Version without pump. For more configurations, please contact MTA's sales office.

The product images shown are for illustration purposes only and may not be an exact representation of the product being offered.

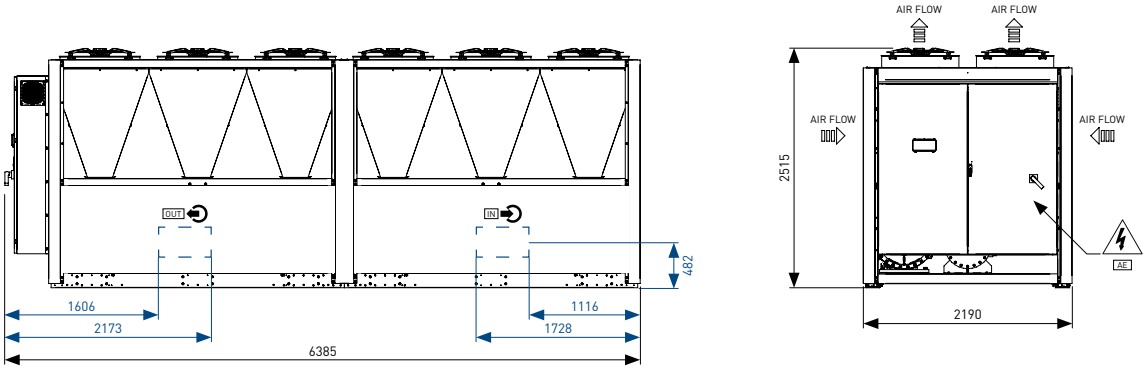

In/out connections position is indicative and will be within the perimeter of the traced box.

PNG2 7202

Version without pump. For more configurations, please contact MTA's sales office.

The product images shown are for illustration purposes only and may not be an exact representation of the product being offered.

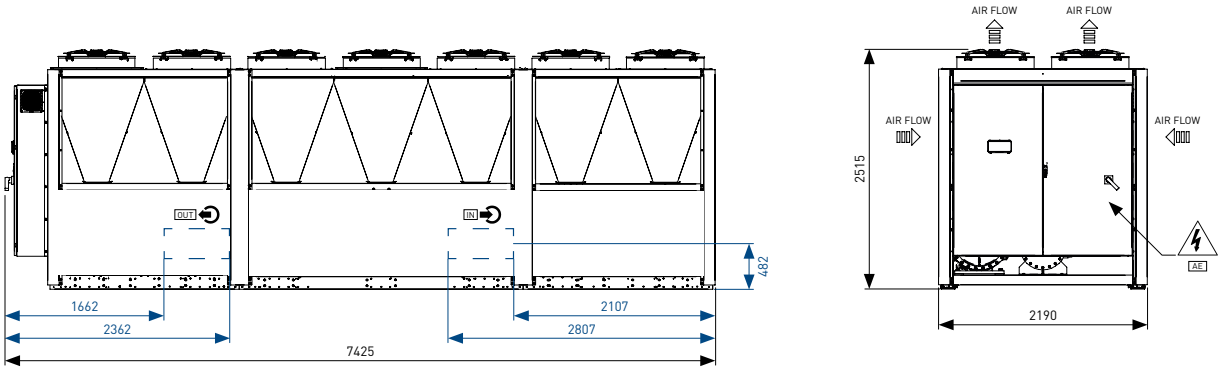

In/out connections position is indicative and will be within the perimeter of the traced box.

	6002	6402	7202
Water inlet	DN150	DN 200	DN 200
Water outlet	DN150	DN 200	DN 200

- Holes
- Electrical power supply
- Air flow
- Air vent = Rp 1/2"
- Water discharge = Rp 1/2"

PNG2 8402

Version without pump. For more configurations, please contact MTA's sales office.

The product images shown are for illustration purposes only and may not be an exact representation of the product being offered.

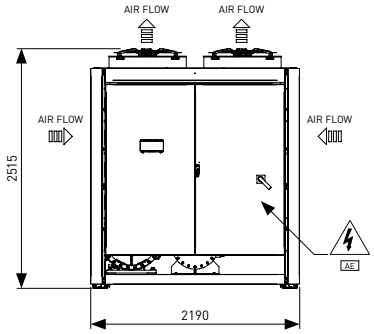

Electrical power supply

Air flow

Air vent = Rp 1/2"

Water discharge = Rp 1/2"

	8402
Water inlet	DN200
Water outlet	DN200

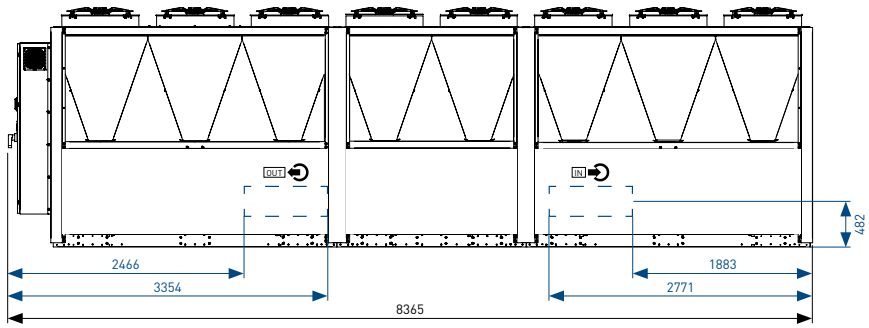

In/out connections position is indicative and will be within the perimeter of the traced box.

PNG2 9602

Version without pump. For more configurations, please contact MTA's sales office.

The product images shown are for illustration purposes only and may not be an exact representation of the product being offered.

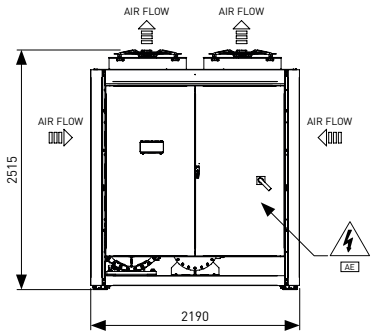

Electrical power

Air flow

Air vent = Rp 1/2"

Water discharge = Rp

	9602
Water inlet	DN200
Water outlet	DN200

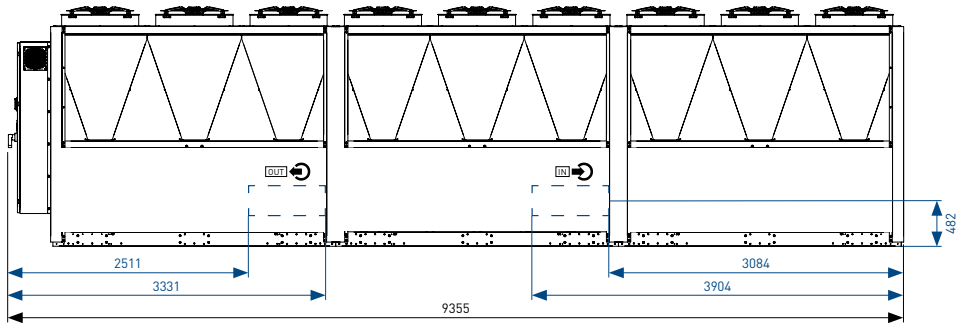

In/out connections position is indicative and will be within the perimeter of the traced box.

PNG2 11202

Version without pump. For more configurations, please contact MTA's sales office.

The product images shown are for illustration purposes only and may not be an exact representation of the product being offered.

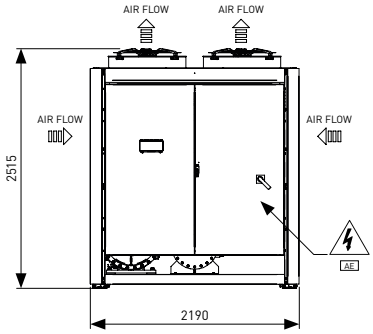

Electrical power

Air flow

Air vent = Rp 1/2"

Water discharge = Rp 1/2"

	11202
Water inlet	DN250
Water outlet	DN250

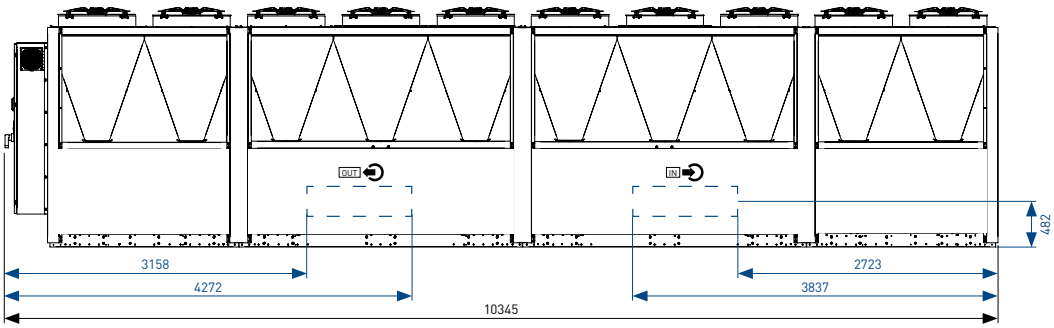

In/out connections position is indicative and will be within the perimeter of the traced box.

PNG2 12802

Version without pump. For more configurations, please contact MTA's sales office.

The product images shown are for illustration purposes only and may not be an exact representation of the product being offered.

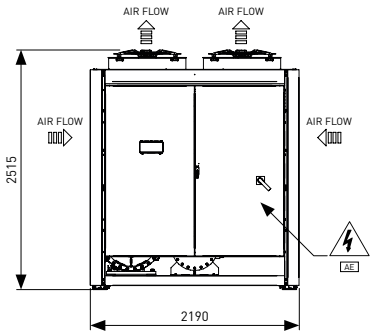

Electrical power

Air flow

Air vent = Rp 1/2"

Water discharge = Rp

	12802
Water inlet	DN200
Water outlet	DN200

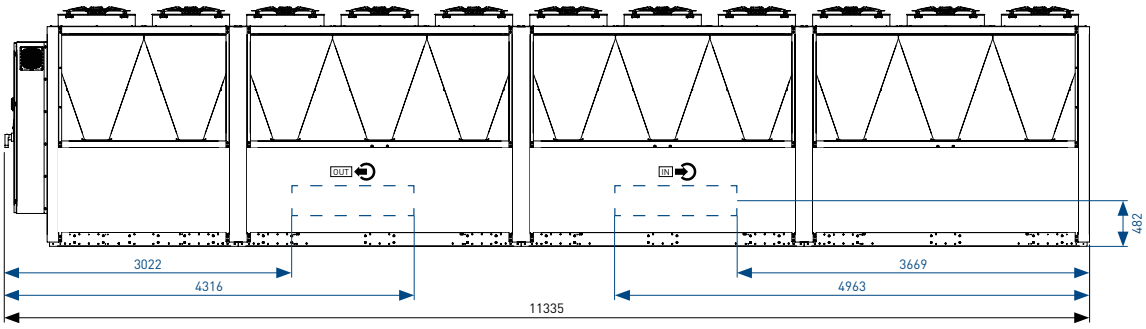

In/out connections position is indicative and will be within the perimeter of the traced box.

CLEARANCES

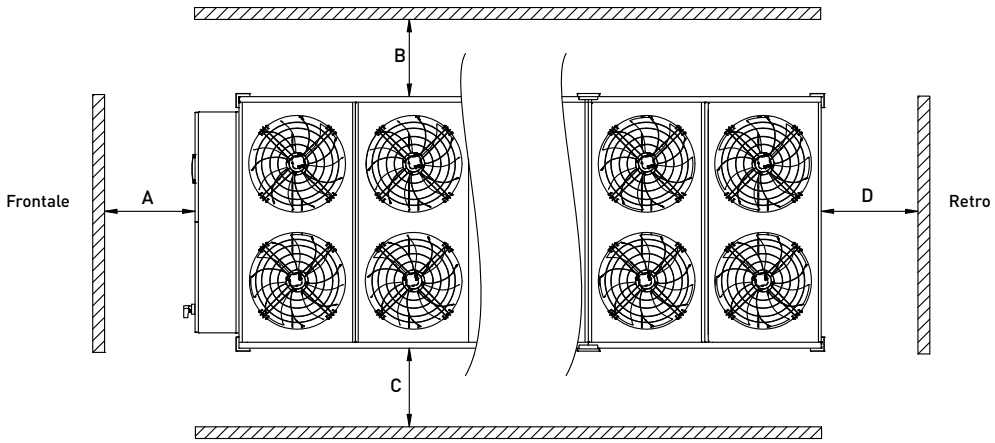

	A	B	C	D
PNG2 2501	1500	1500	1500	1500
PNG2 3201	1500	1500	1500	1500
PNG2 3601	1500	1500	1500	1500
PNG2 4302	1500	1500	1500	1500
PNG2 5002	1500	1500	1500	1500
PNG2 5602	1500	1500	1500	1500
PNG2 6002	1500	1500	1500	1500
PNG2 6402	1500	1800	1800	1800
PNG2 7202	1500	2200	2200	2200
PNG2 8402	1500	2500	2500	2500
PNG2 9602	1500	2800	2800	2800
PNG2 11202	1500	3200	3200	3200
PNG2 12802	1500	3500	3500	3500

Minimum distance to respect (mm).

The installation of the machines must adhere to the following:

a) The units must be installed horizontally to ensure correct return of oil to the compressors.

b) Ensure the clearances prescribed in the catalogue are observed.

c) As far as possible, position the unit in such a way as to minimise the effects of noise emissions, vibration, etc. Specifically, ensure the units are installed as far as possible from areas in which noise emissions could result in disturbance; in this context, do not install the chiller under windows or in passageways between two residential units. Vibration transmitted to ground must be reduced by the use of antivibration devices mounted beneath the unit, flexible couplings on the water piping connections and on the trunking containing the electrical power feeding cables.

d) Electrical installation works must be carried out by a specialist in accordance with the wiring diagrams and in compliance with the current regulations in force in the country where the unit is installed.

e) Make the hydraulic connections, installing the following:
- antivibration mounts;
- shut-off valves;
- bleed valves in the uppermost sections of the system;
- drain valves in the lowermost points of the system;
- pump and expansion vessel (if not already part of the unit);
- flow switch;
- water strainer (1 mm) at the evaporator inlet.

f) Install a water storage tank if necessary; the storage tank serves to reduce the extent of fluctuations of the chilled water temperature (DT). The minimum total volume of storage tank water for hydraulic inertia depends on the model selected according to the following table, considering standard operating conditions:

	2501	3201	3601	4302	5002
Min. volume [m^3]	2,9	3,0	2,9	3,0	3,7

	5602	6002	6402	7202	8402
Min. volume [m^3]	3,1	3,1	3,8	3,8	4,6

	9602	11202	12802
Min. volume [m^3]	5,3	5,7	6,3

g) Install suitable wind screens protecting the condensing coils if the chiller is required to operate with ambient temperatures below 0 °C and if it is envisaged that the unit could be subject to wind velocities in excess of 2 m/s.

h) If the application requires cooling capacities that are greater than the maximum available with a single unit, the chillers can be hydraulically connected in parallel, provided the units in question are identical to avoid creating situations of imbalance in water flow rates.

i) When utilising multiple chillers in parallel, with the condenser coils face to face it is necessary to assure a minimum distance between the condensers coils. The minimum distances recommend between the units are suggested in the overall dimensions, doubles.

l) If it is necessary to treat water flow rates that are higher than the maximum permissible flow rate associated with the chiller, install a by-pass line between the chiller inlet and outlet.

m) If it is necessary to treat water flow rates that are lower than the minimum permissible flow rate associated with the chiller, install a by-pass line between the chiller outlet and inlet.

n) Carefully bleed all air from the hydraulic circuit because even a small amount of air in the circuit can cause the evaporator to freeze.

o) Always drain the hydraulic circuit during winter shutdowns; alternatively, ensure the circuit is filled with a suitable antifreeze solution. Moreover, especially in the case of shutdowns of short duration, it is advisable to order the chiller with an antifreeze heater on the evaporator and to fit additional heating elements on the hydraulic circuit piping.

5050EPNG20001AA 04-21

www.mta-it.com

The images of the products in the document are for illustrative purposes only and therefore do not have any contractual value.

M.T.A. S.p.A.
Viale Spagna, 8 ZI
35020 Tribano (PD) Italy

Tel. +39 049 9588611
Fax +39 049 9588676

info@mta-it.com
www.mta-it.com

MTA France S.A.
Tel: +33 04 7249 8989
www.mtafrance.fr

MTA Deutschland GmbH
Tel: +49 (2157) 12402 - 0
www.mta.de

Rehsler Kühlsysteme GmbH
Tel: +49 (8382) 9623-0
www.rehsler-kuehlsysteme.de

Novair-MTA, S.A. (España)
Tel: +34 938 281 790
www.novair-mta.com

MTA USA, LLC
Tel: +1 716 693 8651
www.mta-usa.com

MTA Australasia Pty Ltd
Tel: +61 1300 304 177
www.mta-au.com

MTA is represented in over 80 countries worldwide. For information concerning your nearest MTA representative please contact M.T.A. S.p.A.

ISO 9001 BUREAU VERITAS Certification
Nº 220817

MTA is ISO9001 certified, a sign of its commitment to complete customer satisfaction.

MTA products comply with European safety directives, as recognised by the CE symbol.

EUROVENT CERTIFIED PERFORMANCE
www.eurovent-certification.com

MTA participates in the E.C.C. programme for LCP-HP. Certified products are listed on: www.eurovent-certification.com

EAC Declaration

Cooling, conditioning, purifying.